Dear Grady-White Owner:

Welcome aboard!

Buying and owning a boat is a very special experience. Of all the many products you'll ever own we want your Grady-White experience to be the absolute best. That means providing the descriptions, explanations and technical support that you need to enjoy your Grady-White with confidence and security.

Your Grady-White exceeds all US Coast Guard safety standards and is built to standards certified by the National Marine Manufacturers Association (NMMA). Best of all, your boat is built to Grady-White standards, standards that have served our owners through some truly extraordinary conditions since our first models built in 1958.

The seaworthiness and safety of your Grady-White is highly dependent on the operation, maintenance and care of your boat, so please read this manual thoroughly and keep it around for reference. If you need further explanation or "hands-on" help, don't hesitate to ask the people at your Grady-White dealership; they have experience with the systems and operations of your boat. If for any reason you need additional help, please feel free to call us at the factory. We sincerely want to provide you with the help and information that will make your Grady-White experience delightful.

Thanks for choosing a Grady-White. All of us at the factory and at your dealership are dedicated to earning your confidence in Grady-White Boats. Again, welcome aboard.

Sincerely yours,

Kris Carroll
President
Grady-White Boats, Inc.

Grady-White Boats, Inc.
5121 Martin Luther King Jr. Hwy, Greenville, NC 27834 • P.O. Box 1527 • Greenville, NC 27835-1527
Tel: 252-752-2111 • Fax: 252-752-4217 • http://www.gradywhite.com

CHAPTER 1: CONSUMER INFORMATION

Owner's Packet 1–1
Warranty Information 1–1
Dealer's Responsibilities 1–1
Consumer Responsibilities 1–2
Hazard Warning Labels 1–3

CHAPTER 2: SAFETY

Required Safety Equipment 2–1
Additional Recommended Equipment 2–1
Registration Numbers 2–1
Emergency Stop Switch 2–2
Emergency Information 2–2
Boating Safety Tips 2–3
Certification 2–4
Loading Capacity 2–5
Carbon Monoxide 2–6
Suggested Boating Classes And Reading Material 2–8

CHAPTER 3: GENERAL INFORMATION

Fueling 3–1
Fuel Select Valve 3–2
Environmental Protection Agency 3–2
Pollution Regulations 3–2
Discharge of Oil or Hazardous Substances 3–3
Disposal of Plastics or Garbage 3–3
Trailering 3–4
Predeparture 3–4
Casting Off And Approaching The Dock 3–4
Anchoring 3–5
Towing 3–5
Shallow Water 3–6
General Information On Boat Handling 3–6
Twin and Triple Engine Boats 3–7
Commonly Used Nautical Terms 3–8

CHAPTER 4: PERFORMANCE

Performance Factors 4–1
Engine Efficiency 4–1
Weather Conditions 4–1
Load Distribution 4–1
Marine Growth 4–1
Trim 4–1
Propeller 4–2
Propulsion System – Outboard 4–3
Engine Warranty 4–3
Steering 4–4

Throttle/ShiftControls 4–5

CHAPTER 5: INSTRUMENTATION AND SWITCHES

Yamaha Instrumentation Panel 5–1
Yamaha Command Link Plus Display 5–1
Yamaha Helm Master™ 5–3
Switch Panel 5–4

CHAPTER 6: MAINTENANCE AND SERVICE

General 6–1
Exterior Fiberglass Finish 6–1
Maintenance 6–1
Cleaning 6–1
Finish/Waxing 6–2
Repairing 6–3
Bottom Paint 6–3
Canvas 6–3
Maintenance 6–3
Snaps and Zippers. 6–4
Vinyl 6–4
Storage 6–4
Upholstery 6–5
Polyethylene/Plexiglass/Vinyl 6–5
Scuppers 6–5
Caulking/Gasket 6–5
Hardware/Stainless Steel Rails 6–5
Hardware Mounting 6–6
Maintenance Procedure For Anodized Aluminum Components 6–6
Fuel System Maintenance 6–7
Fuel Tank Compartment 6–8
Shower Sump 6–8
Batteries 6–8
LED Lighting 6–9
290-305 330 335 336 375 & 376 DC Accy Wiring Color Fuse/Breaker 6–10

CHAPTER 7: WINTERIZATION AND STORAGE

General 7–1
Boat Storage 7–1
Cleaning And Lubricating The Boat 7–2
Draining And Water System 7–2
Head System 7–3
Batteries 7–3
Engines 7–3
Fuel System 7–3
Storage Checklist 7–3
Getting Boat Out After Storage 7–3
Prior To Launching 7–4
After Launching 7–4

CHAPTER 8: 305 EXPRESS

Accessories 8–1
Switch Panels 8–2
Other Switches 8–3
Auxiliary Fuse Panel 8–3
Main Circuit Breaker 8–4
Accessory Outlet - 12 Volt 8–4
Bilge Pump With Float Switch 8–4
Bilge Pump Locations 8–4
Compass 8–4
High Bilge Water Alarm 8–5
Cockpit Shower 8–5
Dockside Power 8–6
Connecting The Dockside Power 8–6
Disconnecting The Dockside Power 8–6
Freshwater Washdown 8–7
Hardtop 8–7
Head Shower 8–7
Seacocks 8–7
Transducer Flats 8–7
Windshield Washer Valve 8–8
AC Powered Accessories 8–8
AC/DC Panel 8–8
AC Powered Accessory Switches 8–8
Battery Charger 8–9
Microwave 8–10
Water Heater 8–10
Stove 8–10
DC Powered Accessories 8–10
DC Powered Accessory Switches 8–10
Livewell - Raw Water 8–11
Raw Water Washdown Operation 8–11
Battery Select Switch 8–11
Stereo 8–12
Trim Tabs 8–12
VacuFlush® Head System 8–13
Air Conditioner 8–14
Bow Thruster 8–14
Generator 8–15
Carbon Monoxide Detector 8–15
AC Transfer Switch 8–16
Blower 8–16
Generator Start/Stop Switch 8–16
Outriggers 8–16
Power Assist Hydraulic Steering 8–17
Sirius Satellite Radio 8–17
TV/DVD 8–17
Informational Drawings 8–18
Access Plate And Rigging Tube Location 8–18
Fuel System 8–19
Air Conditioning Layout 8–20
Diesel Generator Layout 8–21

Bow Thruster Layout 8–22
Labels And Location 8–23
Stereo System Layout 8–24
Livewell/Washdown System Layout 8–25
Livewell/Washdown System 8–26
VacuFlush® Head Layout 8–27
Pressurized Freshwater System 8–28
Thru Hull Detail 8–29
Dockside Wiring 8–30
Accessory Wiring (1 of 2) 8–31
Accessory Wiring (2 of 2) 8–32
Hardtop Wiring 8–33
Battery Wiring With Select Switches 8–34
AC/DC Panel Wiring – One-Line Diagram 8–35
12 Volt DC Distribution Diagram 8–36
12 Volt DC Cockpit Switch Panel Diagram 8–37
12 Volt DC Helm Switch Panel Diagram 8–38
12 Volt DC Lighting Diagram 8–39
12 Volt DC Fuse Block Diagram 8–40
12 Volt DC Trim Tab Diagram 8–41
12 Volt DC Anchor Windlass Diagram. 8–42
12 Volt DC Hardtop Elementary Diagram 8–43
12 Volt DC Ignition Circuit & Trim Diagram 8–44
12 Volt DC High Bilge Water Alarm Diagram 8–45
Stereo System Diagram without Satellite Radio 8–46
Stereo System Diagram with Satellite Radio 8–47
TV/DVD and Phone Diagram 8–48
Air Condition One-Line Diagram. 8–49
Electrical Plug Connection Detail 8–50

CHAPTER 9: LIMITED WARRANTY

Registration Of Purchase: 9–1
Five Year Hull Transferable Warranty 9–1
One Year Material And Workmanship Warranty. 9–1
Warranty Claim Procedures 9–3
Transferable Warranty Form 9–4

Chapter 1: Consumer Information

OWNER'S PACKET

Your Grady-White has many features and accessories that have existing printed material provided by the various equipment manufacturers. This information is compiled in a package that we will reference throughout this manual as an "Owner's Packet." This Owner's Packet includes a Grady-White Owner's Manual and Engine Manual(s) to advise on operation, service, specifications, maintenance, warranty, and other useful facts. While reading your Grady-White manual, you will find other technical literature referenced as resources for detailed information. The Owner's Packet will also consist of operation guides, informative labels, and product warranties you will need to be acquainted with. Your Owner's Packet can also be used to retain instructions and data compiled on additional equipment and accessories installed after delivery.

Sportfish, Cruisers, Yachts Owner's Manual, a book published by the National Marine Manufacturer's Association (NMMA), has been included with your Owner's Packet as a supplement. This publication will be referenced in your Grady-White Owner's Manual to present additional instructions and information on basic boating.

WARRANTY INFORMATION

The Grady-White warranty is located on the next to last page of this manual. **Upon the purchase of your new Grady-White Boat, the dealer will fill out a warranty card.** This card will be kept on file at the dealership and at the Grady-White factory. A copy will be provided for your records and should be kept with other valuable documents for future reference. For questions regarding your warranty please contact your dealership.

DEALER'S RESPONSIBILITIES

Throughout the fabricating and assembly processes, your Grady-White has undergone a series of strict inspections. Subsequent to the final factory overview, your dealer must perform additional pre-delivery checks and approve your Grady-White for delivery.

DEALER RESPONSIBILITIES INCLUDE PROVIDING THE FOLLOWING:

- An orientation of the general operation of your Grady-White.
- A warranty card to be completed and signed by the dealer and the customer. This warranty card is to be sent to Grady-White Boats to validate the warranty.
- An explanation of safety issues regarding the use of containment systems and components.
- A complete Owner's Packet containing literature and information regarding your Grady-White and its separate warranted products' operation, installation, and maintenance instructions.
- A review of all warranties pointing out the importance of mailing warranty and registration to various manufacturers within the required time limits.
- Guidance on acquiring local and out of area service during and out of warranty periods.

CONSUMER RESPONSIBILITIES

THE FOLLOWING ARE RESPONSIBILITIES OF THE GRADY-WHITE OWNER:

- Read and understand the express limited warranty.
- Study in detail all literature and instructions enclosed, and use all equipment in accordance.
- Examine the boat and confirm all systems are working suitably at the time of accepting delivery.
- Render proper maintenance and periodic servicing of the boat in accordance with suggestions in the Owner's Manual.
- Return the boat to the selling dealer for an engine inspection. Refer to the engine's owner's manual for the proper maintenance schedule.

Grady-White Boats has a permanent record of your boat which is retained under its "**H**ull **I**dentification **N**umber" (HIN). Data regarding equipment and accessories, as well as dealer/shipping information is documented. When contacting your dealer concerning warranties or service, please have all relevant information such as serial numbers (HIN) and model number available. This information is on your copy of the warranty card.

The "**H**ull **I**dentification **N**umber," located on the starboard side of the transom, is a significant source of identification and must be noted in all correspondence and orders. Failure to include the HIN only creates delay.

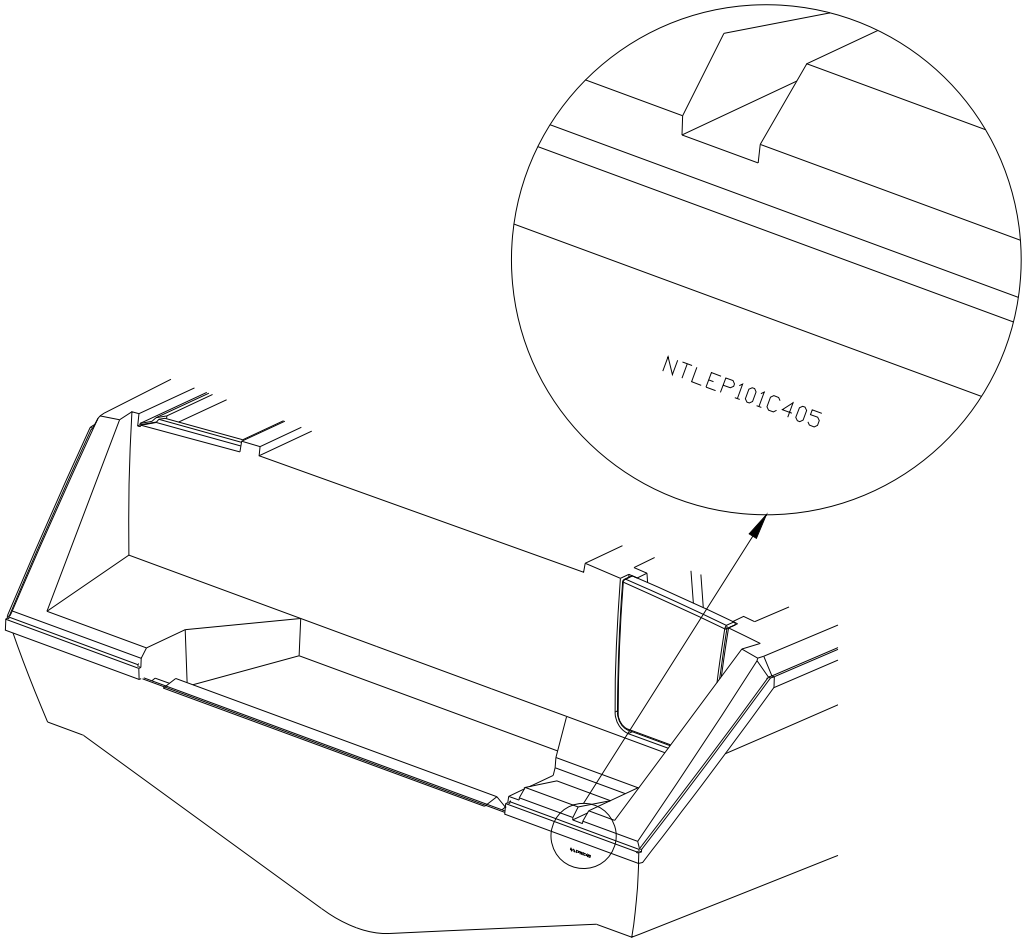

HAZARD WARNING LABELS

The hazard warning labels shown below are applied throughout this manual to alert the customer of potentially dangerous situations that can lead to death, personal injury, and/or product damage. We urge you to observe these warnings and comply with all safety recommendations.

⚠ DANGER
This symbol alerts you to imminently hazardous situations which WILL cause severe personal injury or death if the warning is ignored.

⚠ WARNING
This symbol alerts you to potentially hazardous situations or unsafe practices that COULD result in severe personal injury or death if the warning is ignored.

⚠ CAUTION
This symbol alerts you to potentially hazardous situations that MAY result in minor personal injury or cause product or property damage if the warning is ignored.

NOTICE
This symbol calls attention to installation, operation, or maintenance information which is important for proper operation, but is not hazard related.

Chapter 2: Safety

REQUIRED SAFETY EQUIPMENT

The US Coast Guard (USCG) requires that every boat have specific equipment on board. Check with local regulations on mandatory equipment apart from the list of Coast Guard requirements. See *Sportfish, Cruisers, Yachts Owner's Manual,* page 17, for details on the following required safety equipment.

- **Fire Extinguisher**
  Boats should be equipped with a marine approved fire extinguisher.
- **Personal Flotation**
  All passengers must have an USCG approved personal flotation device (PFD).

  Children and non-swimmers are advised to wear a PFD at all times.
- **Sound Signaling Device (Horn, Bell Or Whistle)**
  Your Grady-White is equipped with a horn that meets USCG requirements.
- **Visual Distress Signals**
  USCG approved visual distress signals are required on U. S. waters. See page 33 of the pamphlet *Sportfish, Cruisers, Yachts Owner's Manual* enclosed with this manual for more information.
- **Lighting**
  Grady-White boats are equipped with navigational lights that meet requirements for recreational vessels for inland and international waters.

ADDITIONAL RECOMMENDED EQUIPMENT

In addition to the required safety equipment, there are additional items that will provide an extra margin of safety and convenience for you and your passengers while boating. For an extended list of basic gear, tools and spare parts, reference page 18 of the pamphlet *Sportfish, Cruisers, Yachts Owner's Manual* enclosed with this manual.

Keep tools and spare parts in good condition. Replace parts removed from spare parts kit. Most importantly, use US Coast Guard approved or marine certified parts where applicable. Conditions found requiring corrective action should be worked on by a qualified repairman.

REGISTRATION NUMBERS

Federal and State laws require a powerboat to be registered in the State where it is primarily used. Registration numbers and validation stickers must be displayed according to regulations. The registration certificate must be on board when boating. The boat serial number or Hull Identification Number (HIN, *page 1–2*) is required on the registration form. The HIN is located on the upper right hand corner of the transom, and is the most important identifying factor. The HIN should be included in all documents and correspondence to provide you timely service.

EMERGENCY STOP SWITCH

All Grady-Whites are equipped with an emergency stop switch. This is a safety feature that if used properly will shut the engine(s) down if the operator leaves or falls from the helm position. The ignition shutdown system includes a shut-off switch, switch clip, lanyard and lanyard clip. The lanyard clip is attached to the operator. If a situation arises where the boat should stop, a pull on the cord to release the clip from the shut-off switch will shut down the engine(s). To reset the emergency stop switch, simply reinstall the switch clip. The decision to use the emergency stop switch rests with the owner/operator. See page 72 in *Sportfish, Cruisers, Yachts Owner's Manual.*

EMERGENCY INFORMATION

While boating, unpleasant situations may develop. You should prepare yourself on how to cope with them whether they happen aboard your vessel or someone else's. Anticipate and plan for specific situations such as fire, man overboard, collision, etc. to give you the confidence and ability necessary to handle an emergency. The key is to remain calm. For emergency procedures, see Section 4 in *Sportfish, Cruisers, Yachts Owner's Manual.*

- **Rendering Assistance**

  The owner or operator of a vessel is required by law to render all practical or necessary assistance to any person or vessel affected by collision, accident or casualty. **However, you are not required to endanger your vessel or passengers to render assistance.**

- **Accident Reporting**

  Report all boating accidents to your local authorities. Federal regulations require boat operators involved in an accident to submit a written report within 48 hours. **In the event of death or disappearance, notification is required immediately** by phone or radio in addition to the written report. These reports can be submitted to the State Boating Law Administrator. Forms can be obtained through the USCG, local harbor patrol offices, sheriff, and police stations.

- **Lightning Precautions**

  This awareness is included to ensure the safety of the owner and passengers. Always be mindful of the weather! When a lightning storm advances, certain safety precautions should be taken. Dock the boat and seek shelter on land. If this is not possible, seek refuge inside the boat until the storm has passed. **Stay out of the water!** Lightning will seek a ground when it strikes and may pass through metal components if it hits your boat. For this reason, avoid contact with metal parts of the boat under these conditions.

BOATING SAFETY TIPS

Safety is an important aspect of boating. Your safety as well as the safety of your passengers and vessel is your responsibility. The following precautions and the ones mentioned in section 1 of *Sportfish, Cruisers, Yachts Owner's Manual* will add to you and your passengers' boating safety and pleasure.

- Before operating your Grady-White **read and study all operation and maintenance manuals**. It is important that you fully understand how to use your boat. Contact your Grady-White dealer for questions. Proper use and service will insure quality performance and longevity of your boat.
- A written float plan left with a **responsible** person can serve as valuable information should you not return as scheduled. Upon returning, your primary responsibility is to notify the person of your return.
- **Never** operate or allow anyone to operate your boat while under the influence of drugs or alcohol.
- **Individuals under the age of 16 should not be allowed to operate your boat. Inexperienced drivers should have constant and direct supervision.**
- Instruct at least one passenger on the fundamentals of basic boating and safe operation in the event of an emergency.
- While boating, passengers should be settled in a safe position. Use hand holds and rails for steadiness. Do not allow bow, transom or gunwale riding. The captain is ultimately responsible for their passenger's safety.
- Keep your boat speed under control. Respect for other boaters and those on shore are common courtesies. The boat's operator is responsible for injury or damage caused by the boat or the wake. Your wake could swamp a smaller craft and endanger its passengers. Stay alert for posted **"No Wake Zones"**.
- Become familiar with the handling personality and limitations of your boat.
- **Never allow swimmers/skiers to enter or exit the boat with engine(s) running.** A shift lever in neutral could become engaged accidentally. Also, exhaust fumes from the outboard engine(s) contain carbon monoxide gas. These fumes may concentrate in this area. *See more information on "Dangers of Carbon Monoxide" on page 2-5.*
- Obtain information and a chart for new areas when possible.
- Clean water and air are responsibilities for all persons. Use litter containers on board and dispose of refuse properly. See *"Pollution Regulations" on page 3–3*.
- Know and obey the **"Rules of the Road"**. See *Sportfish, Cruisers, Yachts Owner's Manual*, beginning on page 19, for a better understanding of right of ways, signals and waterway markers.

CERTIFICATION

This label means your Grady-White is certified by the National Marine Manufacturers Association (NMMA). With this tag, you are assured the fuel system, electrical system, navigation lighting, ventilation, steering and other design elements are not only in compliance with the US Coast Guard regulations, but also meet the more stringent standards of the NMMA. The NMMA is a national trade organization serving all elements of the recreational boating industry including manufacturers of boating equipment. With this tag, you can have confidence in the safety of your boat.

This label means that Grady-White has designed and built your boat to the ABYC standard H-8, buoyancy in the event of swamping. Basic flotation is defined as having enough foam in the boat to create buoyancy and prevent sinking under swamped conditions.

LOADING CAPACITY

Though overloading is a primary cause of many boating accidents, improper loading is equally hazardous. Boaters should know the amount of weight on board and evenly **distribute** the weight within the boat.

At the helm station you will find a NMMA Yacht Certification tag. This means your yacht complies with the Coast Guard safety standards. (NOTE: Any boat with an overall length of 26 feet or greater is defined as a “yacht” by NMMA.

)

CARBON MONOXIDE

⚠ WARNING

(CO) is produced by all combustion engine(s) and generator sets.
Avoid brain damage or death from carbon monoxide.
Keep cockpit and cabin areas well ventilated.
Avoid blockage of exhaust outlets.
Signs of exposure include headache, nausea, dizziness and drowsiness.

Carbon Monoxide, commonly written (CO), is a colorless, odorless gas emitted from any boat's exhaust. The gas is similar in weight to the air we breathe. Therefore, it cannot be expected to rise or fall, but will accumulate in confined spaces.

Carbon monoxide is **poisonous**, and potentially **fatal** if breathed over an extended period of time. Symptoms of CO poisoning include dizziness, nausea, headache, sleepiness, vomiting, throbbing in the temples, muscular twitching, and an inability to think clearly. **If you or anyone else experience these symptoms, immediately get away from fumes and into an area where plenty of fresh air can be consumed. If any symptoms from above persist, seek medical attention.**

Carbon monoxide can accumulate in cabins and under canvas. If your boat is equipped with a canvas that encloses the aft cockpit and propulsion equipment, do not operate the boat with this canvas closed.

Outboard engine exhaust fumes contain carbon monoxide. These fumes may concentrate at the motorwell area. Do not board your vessel with the engine(s) running. Also, do not occupy the motorwell area with the engine(s) running.

Operators need to be aware of the influence of other boats on their vessel as well as the effects they have on neighboring crafts. Of primary concern is the operation of an auxiliary generator with boats moored along side each other. This situation creates an atmosphere which is filled with CO, and extremely dangerous.

If your CO monitor alarm sounds, indicating CO is present, immediately remove yourself from the area and go to a location with fresh air. Shut off sources of CO such as engines and generators and open doors and windows to ventilate the affected area if possible. If you or anyone aboard your vessel experiences persistent symptoms of CO poisoning seek medical attention right away.

⚠ WARNING

BE AWARE of the significance your exhaust may have on other vessels. Likewise, BE AWARE that the operation of other vessel's equipment may influence the carbon monoxide concentration on YOUR vessel.

WARNING

Exhaust fumes from engine(s) contain (CO). Boats with canvas deployed are more likely to collect exhaust fumes. Avoid brain damage or death from (CO). Keep cockpit and cabin areas well ventilated. Signs of exposure include headache, nausea, dizziness and drowsiness.

SUGGESTED BOATING CLASSES AND READING MATERIAL

Like a car, boats must be operated according to safety rules and traffic regulations. Although we include some basic boating tips in this manual, a thorough review of the safety rules and regulations for boating is beyond the scope of this text.

We support the work of the United States Coast Guard Auxiliary and the United States Power Squadrons. We urge you to attend any instructional classes sponsored by these organizations. Reference page 8 of *Sportfish, Cruisers, Yachts Owner's Manual* for training options, and page 23 for information on charts and maps. For further knowledge on boating, we advise that you review the following publications:

- **Piloting, Seamanship And Small Boat Handling**

  (Chapman)*
  Motor Boating and Sailing
  Post Office Box 2319 -- F.D.R. Station
  New York, New York 10022
  *Available on CD ROM

- **Pleasure Boating And Seamanship**

  US Coast Guard Auxiliary
  306 Wilson Road Oaklands
  Newark, Delaware 19711

- **Boatman's Handbook**

  by Tom Bottomly
  Motor Boating and Sailing
  Post Office Box 2319 -- F.D.R. Station
  New York, New York 10022

FOR MORE INFORMATION ON BOATING SAFETY COURSES IN YOUR AREA CALL:

- Boating Education Hotline 1-800-336-BOAT (2628)
- US Coast Guard Boating Hotline 1-800-368-5647
- Contact Your Local Coast Guard

Chapter 3: General Information

FUELING

⚠ WARNING
Safety during fueling requires CAUTION and COMMON SENSE.

Please study the following precautions carefully. Consult your dealer if you have any questions. Prior to your initial fill-up, check your engine manual to confirm the type of fuel and octane rating specified by the manufacturer. Tanks should be filled when the boat is not in use to reduce the accumulation of moisture and condensation. Add stabilizer to fuel that won't be used in 60-90 days.

Fuel containing up to a 10% ethanol blend (E10) is acceptable for use in your boat. Do **not** use alcohol blended fuel that has greater than 10% ethanol such as E15 or E85. These concentrations may be harmful to fuel system components and outboard engines. Other considerations related to Ethanol fuel blends:

- Avoid mixing E10 with fuels that contain MTBE, an additive to gasoline in some fuel blends that oxygenates the fuel to reduce emissions.
- Use a 10 micron fuel filter to capture particulate contaminants that may be loosened from the fuel system due to the solvent nature of alcohol blended fuels.
- Carry spare fuel filters with a 10 micron rating on your boat for emergency replacement if required.

Before Fueling:

- Shut down all engines.
- Turn battery select switch(es) to "off" to insure that all fans, lights, etc. are off.
- Close all ports, hatches, windows and engine compartments to prevent fumes from accumulating in closed areas.
- Extinguish cigarettes and all other lighted materials.
- Have a fire extinguisher near.

During Fueling:

- Observe all safety regulations for the safe handling of fuel.
- Keep the fuel supply nozzle in contact with the fuel fill opening to prevent any static sparks.

After Fueling:

- Tighten the fuel cap until the audible clicking indicates it is secure. Check fuel hoses, connections, and tanks for leaks or deterioration. Wash and clean up any spilled fuel. Dispose of clean up rags or sponges on shore. Do not store these clean up rags in the boat.
- After fueling ventilate all ports, windows, hatches and other closed areas. Conduct a "sniff test" to make certain all fumes are vacant before using the battery select switch(es).

See warnings and check list in Section 6, page 37 of the *Sportfish, Cruisers, and Yachts Owner's Manual*. Reference *"Fuel Tank Compartment" on page 6–8* for more information on cleaning the fuel tank compartment.

FUEL SELECT VALVE

If your boat is equipped with dual fuel tanks, you will have a manual fuel select valve installed. This valve allows you to choose from which tank fuel will be consumed. Remember, as the fuel is consumed and the fuel load redistributes, the performance will be influenced. Select the tank that allows the best performance for your boat.

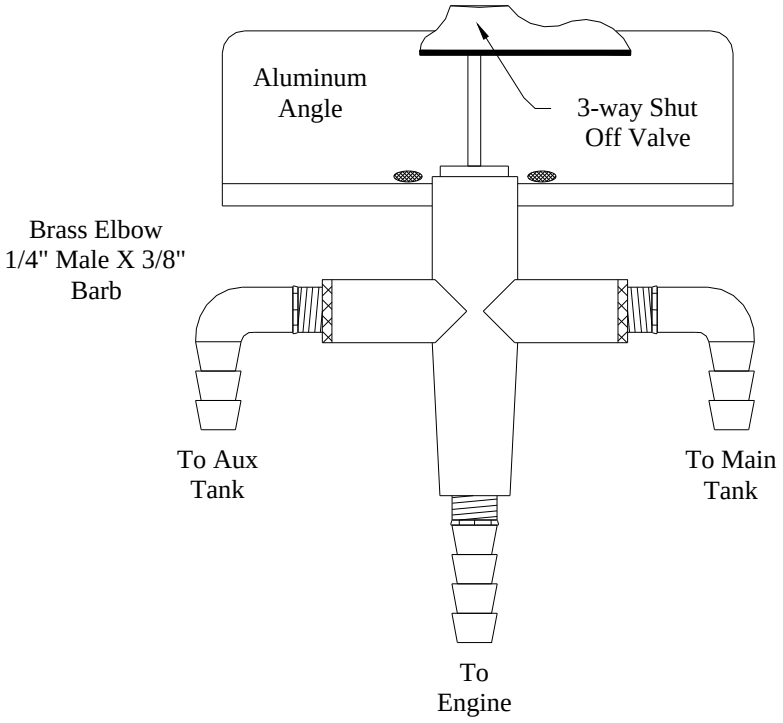

ENVIRONMENTAL PROTECTION AGENCY

All Grady-White boats meet the Environmental Protection Agency standards in effect at the time of manufacture. All boats have the EPA label incorporated within their NMMA certification label.

POLLUTION REGULATIONS

The U.S. Coast Guard defines restrictions on the discharge of oil or hazardous substances and plastics or garbage in the "Federal Requirements for Boating and Boating Safety". You should have received this pamphlet when you registered your boat. Detailed below is a summary of those regulations. You should read the pamphlet and become familiar with any local restrictions where you operate your vessel. Passengers or crew members aboard your boat should also be notified of these regulations.

Discharge of Oil or Hazardous Substances

The Federal Water Pollution Control Act prohibits the discharge of oil or hazardous substances, which may be harmful, into or upon U.S. navigable waters. Vessels 26 feet (7.9m) in length or over must display a placard at least 5” x 8” (12.7cm x 20.3cm) with the text shown below. If your boat is 26 feet or greater in length, an adhesive backed label that meets these requirements is provided in your owner’s packet. It is your responsibility to display this placard on the vessel in a conspicuous place in the machinery space or at the bilge pump control.

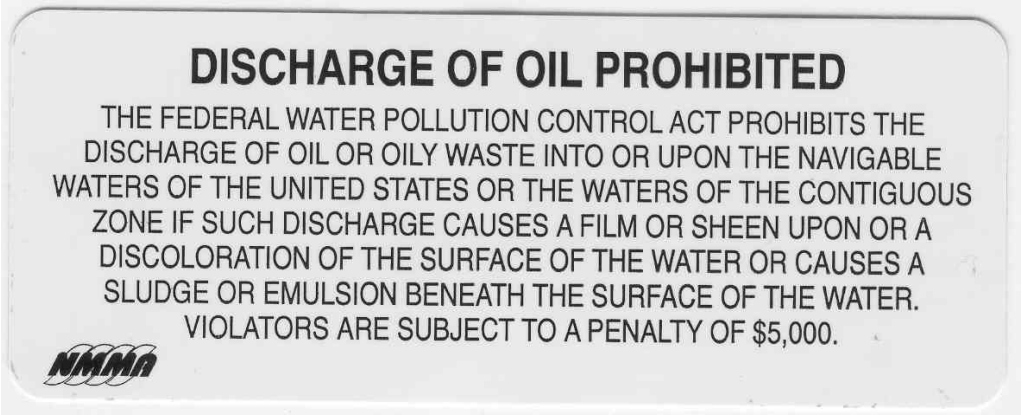

Disposal of Plastics or Garbage

The MARPOL ANNEX V is the Act to prevent pollution from ships and other vessels. Federal regulations prohibit the discharge of plastic garbage anywhere in the marine environment. Plastic includes, but is not limited to: synthetic fishing nets, ropes, lines, straws, six pack holders, styrofoam cups and lids, bottles, buckets and plastic bags. These regulations also restrict the disposal of other types of garbage within specified boundaries from shore. Any vessel 26 feet

(7.9m) and over must display the placard below or a similar version at least 4” x 9” (10.2cm x 22.9cm) which details the regulations. If your boat is 26 feet or greater in length, an adhesive backed label that meets these requirements is provided in your owner’s packet. It is your responsibility to display this placard on the vessel in a prominent location readily accessible to crew and passengers.

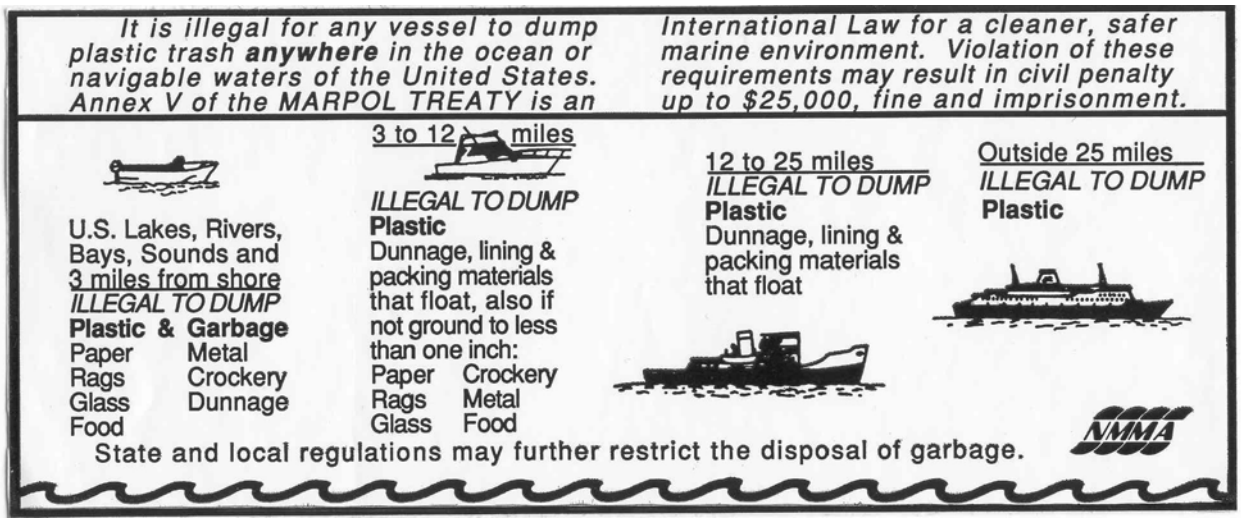

TRAILERING

The adjustment and balance of your boat on the trailer determines how easily your boat may be transported. The tongue weight on the hitch ball should be 5-10% of the total weight of your boat, motor and trailer. Tail-heavy loads cause swaying while trailering. The rollers and/or bunkers of your trailer should be adjusted so that the weight is distributed evenly across the stern and forward throughout the keel sections. Your dealer can help adjust your trailer properly.

Practice maneuvering the trailer; the trailer always backs in the opposite direction of the vehicle. To maneuver the trailer, turn the steering wheel in the direction you want the trailer to go. Familiarize yourself with this manual and all aspects of your boat prior to initial launch. At the launch site, go through a pre-launch checklist. The list should be suited to your specific needs.

Trailering and relative information can be found on page 94 in *Sportfish, Cruisers, Yachts Owner’s Manual.*

PREDEPARTURE

See the checklist on page 35 in *Sportfish, Cruisers, Yachts Owner’s Manual* before starting out.

CASTING OFF AND APPROACHING THE DOCK

Unlike an automobile, the stern of your boat reacts first when turning. A turn to the right will swing the stern to the left and vice-versa. Remember that turning your boat away from an object, such as a dock, will tend to swing the stern toward that object. Reference procedures for casting off and approaching the dock on page 42 of *Sportfish, Cruisers, Yachts Owner’s Manual.*

ANCHORING

Some factors that determine the size and type of anchor most suitable for your boat include the size of your boat and the type of lake, sea or river bottom in your boating area. *Sportfish, Cruisers, Yachts Owner's Manual* has a list of tips concerning anchoring starting on page 46.

NOTICE

It is illegal to tie your boat to navigational aids such as buoys and markers.

⚠ WARNING

Never anchor off the stern of the boat especially in strong winds or currents. The weight of the stern and flat surface to the seas can easily cause water to enter over the transom and swamp the boat.

TOWING

In the event of a mishap or power loss you may need to tow a boat or be towed. You should not tow a boat larger than your own. Always use safety and good judgement when towing. Never tow a boat if you are not equipped with the proper lines. Passengers should never grasp a towline. It should be secured to the boat. See page 30 in *Sportfish, Cruisers, Yachts Owner's Manual.*

Before towing a boat, make a bridle and tie it securely to the pad eyes on the transom with enough slack to clear the engines. Pad the line wherever it comes into contact with the boat to prevent chafing. Attach a tow line to the bridle so that it can slide from side to side to prevent too much pressure on a single pad eye. The tow line should then be attached to the bow eye or to a bridle on the towed boat. The tow line should be a minimum of twice the length of the towing boat, the longer the better. Do not try to run in too close when passing the towline to the other boat. Send either a light line or attach the towline to a life preserver to be pulled in. Be aware of the other boat's propeller.

The towed boat should always have someone at the wheel since the boat may swing off course. Start the tow off slowly; a steady pull at a moderate speed should be used. It is important to keep the slack out of the propeller area. Watch the action of the towing boat. If excessive slack develops in the towline and contact is obvious, turn in either direction to avoid hitting the stern.

⚠ WARNING

As a precaution, passengers on both boats should stay clear of the towline; lines under stress could snap and fly in either direction causing injury.

SHALLOW WATER

Most boats that become grounded can be floated off with engine(s) tilted to reduce the draft at the transom. With motors tilted, try rocking the boat from side to side to break the suction of mud from the keel. Move passengers or heavy objects from the point where the boat is grounded. Do not lower or start the engine(s) until the boat is clear of the ground. Refer to page 53 in *Sportfish, Cruisers, and Yachts Owner's Manual*.

⚠ CAUTION

Do not lower or start engines if the propeller is in mud or sand. Wait until the boat is refloated to avoid damage to the cooling system of your engine.

Be mindful of water level fluctuations when boating in water with tidal changes. If you are grounded on an incoming tide, you can wait until the tide is high enough to refloat your boat. However, on an outgoing tide, quick action should be taken to refloat your boat. If this is not possible, set an anchor to keep the boat from becoming driven further aground. Set the anchor to counter the action of the wind or current. The anchor, in some cases, can also be used to pull the boat free.

Many inland areas have rocks and stumps which could crack or puncture a fiberglass hull. Be familiar with the boating area, and use caution in shallow water.

GENERAL INFORMATION ON BOAT HANDLING

The best method of learning how to handle and obtain the best performance from your boat is to practice and experiment. After several hours of operation, you should experiment with the throttle settings to discover the setting that will be the most comfortable and economical range for your particular load conditions.

We suggest that you make a speed and RPM chart to obtain the most economical operation. Operate the boat at various speeds and check the fuel consumption. Compute the amount of operating time remaining when the fuel gauge has only one bar remaining on the display. Make a log of this type of information and have it available when using your boat. Other statistics you may want to determine could include the following:

- Minimum speed for effective steering.
- Turning radius at different speeds.
- Response to steering at low speeds.
- Accelerating and deceleration rates.
- Time and distance to bring the boat to a stop at different speeds.
- Control of the boat in close quarters.
- Time required to bring the boat on plane.

Also read the section in *Sportfish, Cruisers, Yachts Owner's Manual* beginning on page 49 for information on safe operating speed.

TWIN AND TRIPLE ENGINE BOATS

Twin and triple engine boats are easier to maneuver than single engine crafts. However, they still require practice to ensure comfortable operation. The boat will run ahead or backward in a straight line when multiple engines are working together at the same speed. The engines also can be used to steer to port as well as starboard. Moving ahead on one engine will cause the bow to swing away from the running engine side and to move forward at the same time. Backing up with one engine will cause the bow to swing toward the running engine side and the boat to move backward. With twin engines, running one engine ahead and one engine astern will cause the boat to turn end-for-end in little more than its own length and running multiple engines in the same direction at different speeds will cause the boat to move in the direction dictated by the faster engine but its influence will be modified by the slower engine.

COMMONLY USED NAUTICAL TERMS

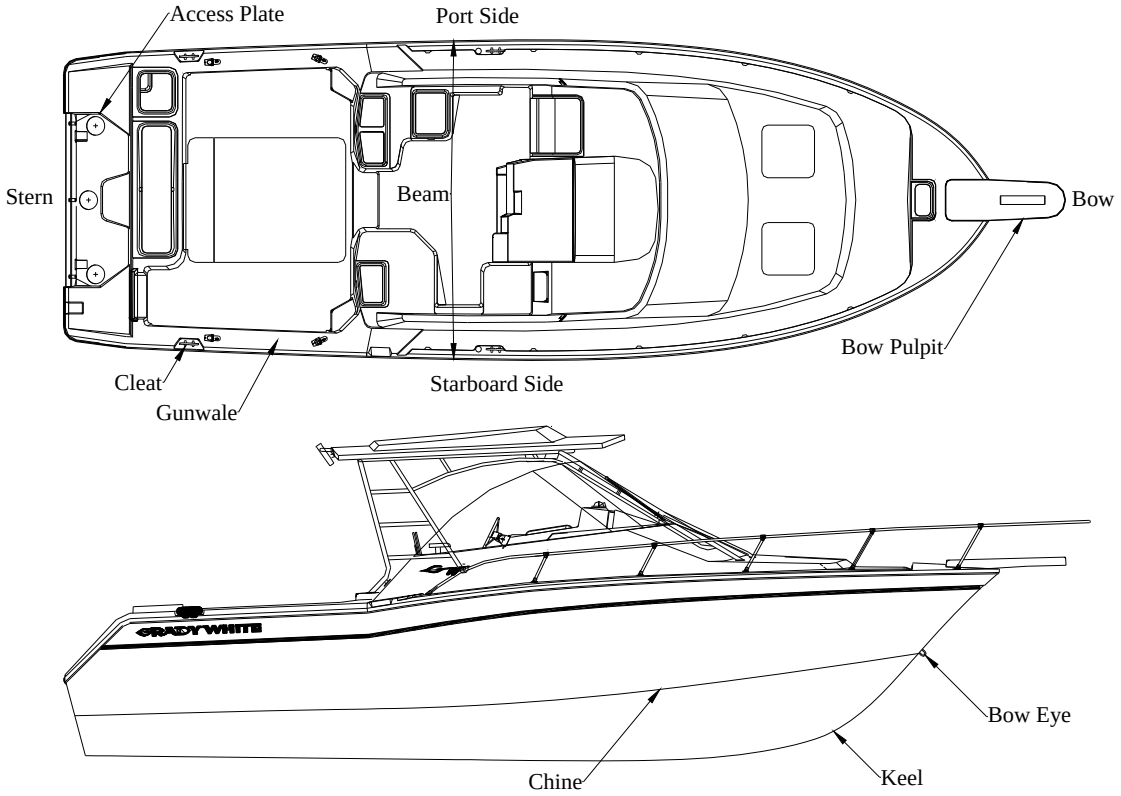

Abeam - a line perpendicular to a boat's keel
Access Plate - a removable, watertight cover that provides quick entry to enclosed areas for maintenance or visual inspection
Aft - toward the rear or stern of the boat
Beam - the greatest width of the boat
Bilge - the lower interior area of the hull
Bow - the forward section of the boat
Bow Eye - a U-shaped hull fitting used to attach the trailer winch to the boat
Bulkhead - vertical partition in the boat
Chine - point where the topside and bottom of the boat join
Cleat - deck fitting with arms or horns on which lines are fastened
Deck - upper structure which covers the hull
Draft - depth of water required to float a boat
Fathom - a depth measurement equal to six feet
Freeboard - distance measure between waterline and deck
Gunwale (Gunnel) - point where the deck and hull join
Hatch - an opening in the deck to provide access below
Headroom - vertical distance between the floor and over head structure or canopy ceiling
Hull - major component that provides a watertight platform buoyant enough to float a craft and its load
Keel - the major longitudinal member of a hull -the lowest external portion of the boat
Knot - a measurement of speed equal to nautical miles per hour
Lee - the side that is sheltered from the wind
List - a tilt or lean to one side
Port - a term designating the left side of the boat when facing forward
Scupper - holes permitting water to drain overboard from deck and cockpit
Sheer - curve or sweep of the deck as viewed from the side
Starboard - a term designating the right side of the boat when facing forward
Stern - rear of the boat
Stringer - longitudinal members fastened inside the hull to add rigidity and strength
Wake - the movement of water created by a moving boat
Windward - side facing the direction of the wind (against the wind)

Chapter 4: Performance

PERFORMANCE FACTORS

Maximum performance is dependent on many factors and cannot be guaranteed. These factors will vary with changing conditions. Some of these factors are listed below. Reference the trouble-shooting guide on page 65 in *Sportfish, Cruisers, Yachts Owner's Manual* for additional suggestions on adjusting performance.

Engine Efficiency

Engines operate most efficiently when they are properly tuned, and the props are in good condition. Efficiency will decrease if normal care and maintenance are not performed. Neglecting the engines will cause power to drop and speed to decrease. In addition, expensive repairs may become necessary. Be sure to follow all instructions in the engine operation manual(s).

Weather Conditions

Weather conditions sway engine performance. Barometric pressure and humidity affect horsepower. A change of weather could amount to a 10% loss in horsepower on some hot days.

Load Distribution

A decrease in performance will be noted when gear, equipment, passengers, and fuel are added. This extra load will affect the performance of your boat according to the distribution of the weight. Another type of extra load that could affect performance is the accumulation of water in the bilge. Keep the bilge dry to eliminate this type problem.

Marine Growth

Maximum performance is obtained only when your hull bottom is clean. Marine growth on the bottom of the boat will increase resistance and decrease speed. These conditions will also increase fuel consumption. Reference *"Cleaning" on page 6–1* for more information on cleaning your hull bottom.

Trim

The outboard engine(s) are equipped with power tilt and trim mechanisms. The purpose of power tilt is to raise the engine(s) for launching, loading or trailering. Power trim may be used to adjust the boat's planing performance and running attitude. See power trim, page 52 and 72, in *Sportfish, Cruisers, Yachts Owner's Manual*.

Trim refers both to the weight distributions inside the boat and to the angle of thrust of the engine. The angle of thrust of the engine forces the bow up or down. The trim tabs on your boat also control the trim of the boat, similar to the power trim. Refer to the Trim Tabs section in Chapter 8 for additional information.

Propeller

The condition of your prop has a major influence on the performance of your boat. Your engine(s) should be equipped with the best size prop for normal conditions. Unusual uses or weight conditions may require special props. A damaged prop can affect your boat's top speed, cause vibrations, create a sudden drop in RPMs or even increase fuel consumption.

⚠ CAUTION
Stay within the engine manufacturer's maximum and minimum RPM ranges when replacing props. This information is located in your engine manual.

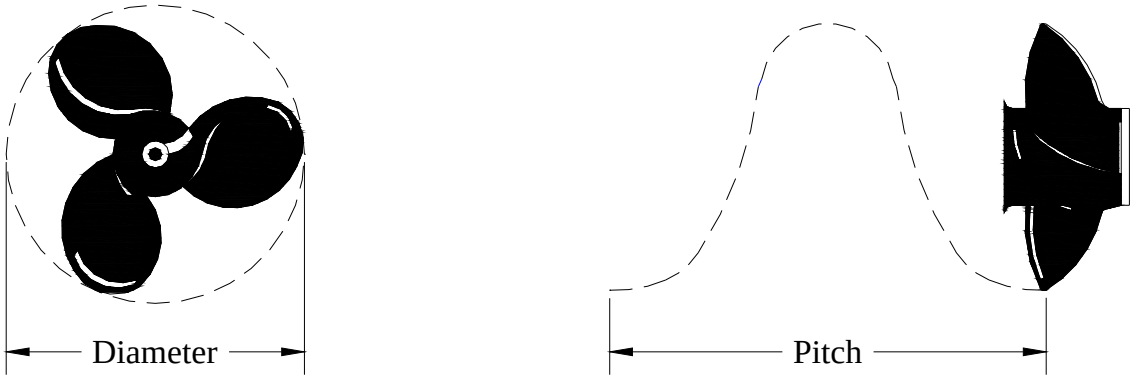

Diameter and pitch are the two basic dimensions of a propeller. Diameter is the distance across the circle made by the blade tips as the propeller rotates. Pitch is the theoretical (not accounting for slippage) forward distance the propeller would move in one revolution. An example of a propeller dimension would be 14 X 17 for a propeller having a diameter of 14” (35.6cm) and a pitch of 17” (43.8cm).

PROPULSION SYSTEM – OUTBOARD

The engine manufacturer supplies all vital information concerning your engine(s) in the Operation and Maintenance Manual(s). Details of important engine functions such as the lubrication system, cooling system, and alarm/monitoring system are outlined in these manuals. Your familiarization with this engine reference material will result in the proper usage and service essential for safe and enduring engine performance. These manuals are included with the Owner's Packet.

⚠ DANGER

Do not inhale exhaust fumes! Exhaust contains carbon monoxide — a dangerous gas which is potentially lethal.

⚠ WARNING

Do not attempt to service any engine or drive component without being totally familiar with the safe and proper service procedures. Certain moving parts are exposed and can be dangerous.

⚠ CAUTION

Do not paint the outboard motors with anti-fouling paints designed for boat hulls. Many of these paints can cause severe damage to the engines.

ENGINE WARRANTY

A warranty registration card is included with all engine manuals. It should be completed and returned to the engine manufacturer as soon as possible.

STEERING

Most outboard engines are equipped with an adjustable rudder trim tab. This trim tab should be adjusted to balance the steering at the speed which you travel most frequently. Variations in speed, boat load or engine trim will cause the steering to pull in one direction. If the boat pulls to the left, adjust the trim tab to the left and vice-versa.

- **Mechanical Steering**

  Grady-White boats that use mechanical steering are equipped with No Feedback Mechanical Steering. No feedback steering provides easier steering and increased control by offsetting the engine(s) torque.

  The mechanical steering system is designed to require a minimum amount of maintenance. However, you should periodically inspect the steering system (especially the control heads, cable ends, and attachments) for wear, rust, or corrosion and lubricate the parts when needed. If you notice a change in the “feel” of the system such as binding, looseness, noise, or sticking, immediately have a qualified marine technician perform a thorough check.

  The push rod at the end of the cable is vulnerable to freezing if it is not greased routinely. When the boat is not in use, the motor should be turned so the push rod is not exposed to the elements. If you operate in salt water areas, lubrication is extremely important, and you should make frequent inspections for corrosion.

- **Hydraulic Steering**

  Hydraulic steering systems require regular preventative maintenance for continued safe and reliable operation. The oil level in the helm pump must be maintained within acceptable operating levels. A low oil level will allow air to get into the steering system and result in unresponsive steering. The oil level should always be within 1/2 inch (1.3cm) from the base of the fill hole, located on the front top portion of the helm pump. Check the entire steering system regularly for oil leaks. Unobserved leaks over a period of time will result in unresponsive steering and possibly loss of steering. Refer to the steering manual for specific recommendations and additional maintenance requirements. Any slow or sudden change in the “feel” of your steering system indicates an immediate need for a thorough inspection. All repairs and replacements to steering systems should be made only by a qualified marine technician.

- **Tilt Steering**

  If tilt steering is available on your model, this accessory will be in conjunction with either mechanical steering or hydraulic steering depending on the model. This feature enables the operator to tilt the wheel up or down. Refer to the steering system's manual for information on oil levels with hydraulic tilt steering.

THROTTLE/SHIFTCONTROLS

The throttle/shift controls located at the helm station control the flow of fuel to the engine. They also act as gear shift levers to control the forward and reverse thrust of the propellers.

The middle position of the throttle control is the neutral position. Move the control forward to engage the shifting mechanism which creates a forward thrust of the propeller. Advance the forward movement to increase the fuel flow to the engine and boost the forward lunge.

Move the control lever aft of the neutral position to reverse the shift mechanism and create a reverse thrust of the propeller. Increase the aft movement to increase the reverse thrust. Remember that propellers are designed for maximum forward thrust; so, reverse thrust will not be as efficient.

All controls have a neutral safety mechanism. This mechanism will not allow the engine to start when the control is in gear. You may use the neutral lock out feature on the control handle to increase the flow of fuel to the engine while remaining in the neutral position.

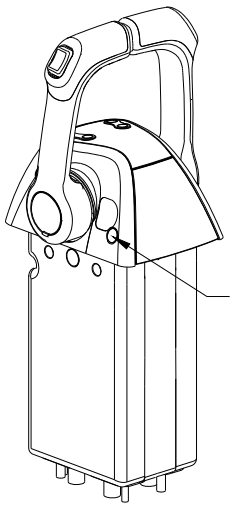

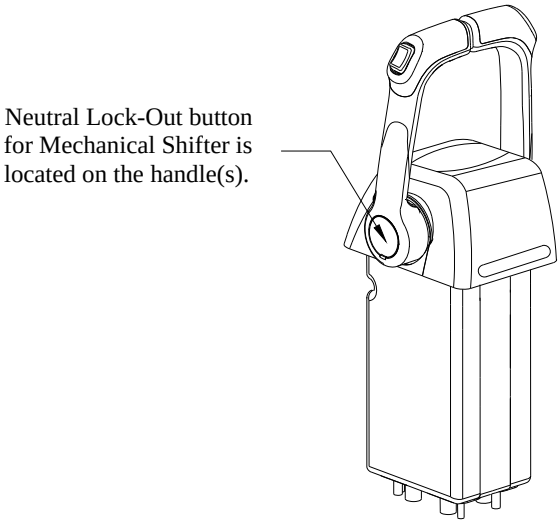

Reverse the shift mechanism to stop a boat that is moving forward. This change in direction will provide a “braking action” and slow the boat.

⚠ CAUTION
The braking action causes a wake which may wash over the transom and flood the boat if the vessel is moving too fast. Allow engine RPMs to decrease before shifting into reverse. Also, under certain conditions, not allowing the RPM’s to reduce before shifting to reverse may cause the engine(s) to shut down.

Chapter 5: Instrumentation and Switches

YAMAHA INSTRUMENTATION PANEL

Grady-White installs full Yamaha Command Link or Command Link Plus instrumentation on all boats. The instruments are powered by the ignition key(s) and will operate when the ignition switch(es) is in the “on” position.

YAMAHA COMMAND LINK PLUS DISPLAY

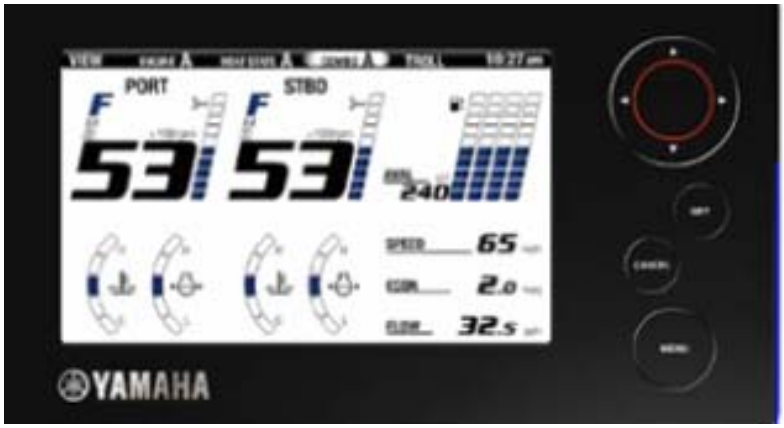

This Yamaha display provides engine and boat information listed below. The display of these functions and other graphics may be customized. Please see the Yamaha owner’s manual for detailed instructions on customizing.

- **Fuel Level**

  This feature indicates the gas tank(s) fuel level. Remember two things when reading this gauge:

  - The accuracy of your gauge varies with the attitude of your boat in the water (trim or list).
  - The fuel pickup tube inside the gas tank is not capable of withdrawing all of the fuel from the tank.

  For these reasons, never operate your boat at extremely low fuel levels.

- **Fuel Economy**

  This feature indicates the engine’s fuel economy in miles per gallon.

- **Fuel Consumption**

  This feature indicates the fuel consumption in gallons since the feature was last reset.

- **Fuel Flow**

  This feature indicates the fuel flow through the engine(s) in gallons per hour.

- **Low Fuel Warning Indicator**

  This feature indicates when the fuel level in the fuel tank(s) is becoming low by flashing the lowest bar.

- **Speedometer**

  This feature indicates boat speed in miles per hour, knots per hour, or nautical miles per hour. On boats with V8 engines, this gauge must be interfaced with a GPS.

- **Trip Distance Meter**

  This feature indicates the distance traveled in miles or nautical miles since the meter was last set.

- **Revolutions Per Minute (RPM)**

  This feature indicates the RPM using 100 RPM intervals. Consult your engine owner's manual for the recommended operating RPM range.

- **Trim Position**

  This feature indicates the angle of thrust of the engine. See *"Trim" on page 4–1* for adjustment recommendations.

- **Battery Voltage Indicator**

  This feature indicates the battery charge when the engine is off and indicates the alternator output when the engine is running. A reading of 12 or 13 volts is normal indicating a fully-charged battery. Readings of 11 or below indicate a weak battery which may not start the engine. A reading of 13 to 15 volts when the engine is running is normal. Readings over 15 volts may indicate regulator problems. Low or fluctuating readings may indicate loose connections or trouble in the regulator and alternator circuit.

- **Cooling Water Temperature with Warning**

  This feature indicates the temperature of the cooling water circulating through the engine and warns you when the temperature exceeds the recommended operating range indicated by your engine owner's manual. Should you receive this warning, immediately shut off your engine to prevent damage. Overheating is often caused by obstruction of your engine's intake on the lower unit. Check this water intake first if you experience trouble.

- **Hour Meter**

  This feature records the cumulative number of hours the engine has been in use.

- **Trip Hour Meter**

  This feature indicates the number of hours the engine has been in use since it was last set.

- **Oil Pressure with Warning**

  This feature indicates the engine oil pressure with a warning for low oil pressure. Refer to your engine owner's manual for information regarding engine oil and oil pressure.

YAMAHA HELM MASTER™

Helm Master™ is an optional fully integrated boat control system for Yamaha outboard-powered boats, in twin or triple engine configurations, which includes digital electronic steering, digital electronic throttle and shift, and a joystick control to facilitate docking.

On the joystick are two control selector buttons. The Joystick selector activates the joystick. The remote control must be in the neutral (center) position for this selector to be activated. The High Mode selector allows for increased engine RPM. The joystick controls the side to side and rotational movement of the vessel. The operator is the central pivot point around which the boat moves and the further one moves the joystick, the greater the thrust and speed in that direction. Return the joystick to the neutral position when finished maneuvering. Operating the throttle disengages the joystick and returns operation to the remote control box and steering wheel.

The Digital Steering Helm sends signals to the Powertrain Control Units (PCU), which control the operation of the electric pumps that pump hydraulic fluid to the steering cylinders on the engines. The Steering Control Unit (SCU) receives signals from the steering cylinder position sensors and the PCU's to carry out joystick and steering operation. One by-pass valve assembly per engine is required, and allows the hydraulic pump system to be by-passed in an emergency or for maintenance.

The Digital Remote Control has 6 control selector buttons whose activation is indicated by a green LED. The Speed Control selector is used to set the RPM's throughout the range of the engine. The Single Lever selector allows the port lever to control the shifting and speed of all engines. The Station Selector is used to select the active station on boats with two stations. The Center Engine selector allows the port lever to control the center engine only. The Trim Assist selector allows the operator to synchronize the trim angle to a given RPM so that the engine will trim to the desired angle. The Free Throttle selector allows the selected engine to be throttled up with the shift function disengaged.

The Electronic Key Switch uses a radio frequency key to power the main switch panel. Touch the key to the panel and two audible beeps indicate the system is unlocked. Press the Ignition button, then the Start/Stop button to start the engines. To engage the Y-COP security system touch the key to the panel after the engines are turned off. A single audible beep indicates the system is immobilized.

The Command Link Plus® display allows the operator to adjust and customize settings, though some settings must be adjusted by an authorized technician. The information provided here is only intended to be an overview of the system. For complete details on the operation and set-up of the Helm Master system please refer to the Yamaha owner's manual or consult your dealer.

SWITCH PANEL

At the helm station you will find an accessory switch panel. Not all boats are equipped with the same accessories. Consult your dealer for specific information or questions on the accessories included on your boat. More detailed descriptions of switch functions are located in Chapter 8 of this manual.

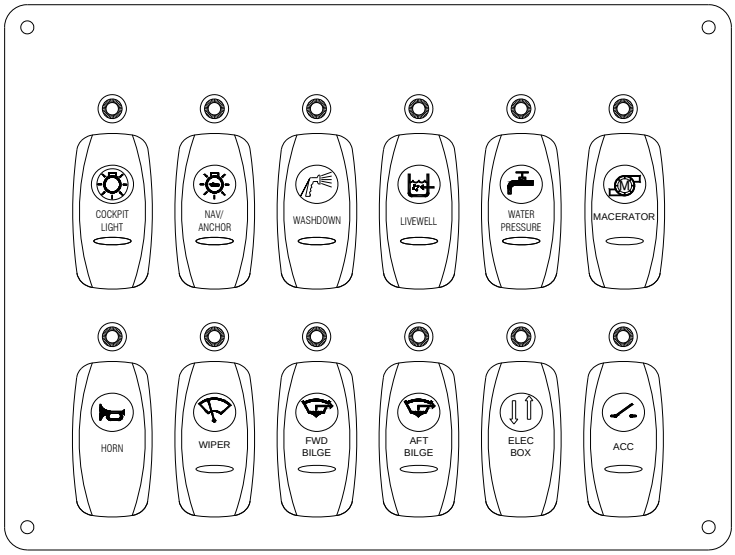

This drawing represents a generic switch panel layout. Actual panels will differ depending on the boat model and optional accessories installed during manufacturing.

Chapter 6: Maintenance and Service

GENERAL

The amount of maintenance required to keep your boat operating properly and to maintain the appearance is dependent on how the boat is used, amount of usage, salt or fresh water, geographic location, etc.

Your hull and deck are constructed by the “hand lay-up method” using the highest quality fiberglass mat and woven roving. This method of construction ensures a proper fiberglass-to-resin ratio and uniform thickness resulting in a much stronger boat than those constructed of “chopped glass”. This process ensures your Grady-White is the strongest, most durable fiberglass boat possible.

Keep the bilge area clean and dry. Leaks found early and corrected will less likely cause damage. Do not allow grease, grime, and dirt to build up.

While proper maintenance of your boat is a source of pride, it is also key to maintaining your boat's value. A few simple steps will keep your fiberglass Grady-White looking showroom bright for years.

EXTERIOR FIBERGLASS FINISH

The exterior finish of your Grady-White is a thin layer of resin with a finished color pigment called gel-coat. It is used for cosmetic purposes and makes routine maintenance relatively simple. Although gel-coat has a hard smooth surface, it does contain microscopic pores that will allow surface discoloration if not kept clean.

Maintenance

Normal exterior finish maintenance of your Grady-White is similar to the care you would give your automobile. Do not use caustic, highly alkaline cleaners or those containing ammonia. These cleaning agents may darken gel-coat. The resulting stain is a chemical reaction and can be removed with a rubbing compound or by light sanding with 400 grit followed by waxing. Also, using common household bleach (chlorine) may damage the gel-coat finish just like bleach can damage clothing with colors. Bleach impacts solid colors by causing blushing or fading and for this reason should not be used on gel-coat.

Cleaning

The best way to prevent discoloration and soil build-up is to hose the boat with fresh water after each outing or on a regular basis. This build-up is the result of use and environmental pollutants. Clean the boat regularly with a mild household detergent and plenty of fresh water. Avoid strong detergents, citrus based cleaners, or bleaches. These products are potentially harmful to the appearance and durability of your boat’s gel-coat. Always read the label before using any cleaning product to make sure it says safe for use on fiberglass finishes. Use a sponge on smooth surfaces and the deck. A brush can be used on the nonskid areas. Use Fresh water to rinse away all grime and residue.

Finish/Waxing

Gel-coat will age or dull naturally due to constant exposure to the natural environment and pollutants. Discolorations are shallow in depth. Factors that will affect the rate of discoloration are: the sun, pollution, old wax accumulation, and the salt content of water. Polishing compound (fine abrasive) or rubbing compound (coarse abrasive) is recommended for use on fiberglass finishes to remove scratches and stains or restore severely weathered surfaces. These products can be applied by hand or mechanical means. The process below will help restore fiberglass finishes:

- Clean the affected area with a good detergent and fresh water.
- Remove stubborn stains or discoloration by gently wet sanding the affected areas with 600 grit "wet or dry" sandpaper. **Always sand in one direction.** Use plenty of water and sand curves in the same direction. Dry the area to make sure all the discoloration has been removed. Repeat this process if necessary.
- Buff using a polishing compound suitable for fiberglass, an electrically or pneumatically operated buffer at low speed (1750-2250 RPM), and an 8-inch (20.3cm) lamb's wool pad.

⚠ CAUTION
Keep buffer moving. Do not allow it to rest in one spot. Heat build up will quickly distort the surface.

⚠ CAUTION
Compounding too often or excessive compounding can wear away the gel-coat.

- When buffing is complete, wash away compound with clear water and dry the area.
- Once the area is clean it may be waxed. This will enhance the gloss while providing a seal to retard staining or soil accumulation.
- See a local dealer for advice on wax for your boating region. The wax film will seal the pores as well as enhance the looks of your boat. **Do not wax surfaces that may be walked on; they will become slippery.** While waxing your boat, inspect the surface for any damage. Have the damage corrected as soon as possible.

Repairing

Though gel-coat is a very durable material, it is susceptible to scratches, blistering, and web-like cracking (crazing) over time. It is elastic enough to withstand strong blows while flexing with the hull's movement. Gel-coat problems are cosmetic and will not affect the structural integrity of your boat.

Some gel-coat damage and imperfections such as nicks and scratches can be repaired by obtaining a color match patch kit. This kit can be purchased through your Grady-White dealer. Acetone, the most suitable cleaning agent for gel-coat, can also be acquired through your dealer. Instructions are included in the patch kit.

⚠ WARNING

M.E.K.P. (Methyl ethyl ketone peroxide), gel-coat and acetone are flammable and hazardous chemicals that must be handled properly. Follow instructions carefully. After the gel-coat is catalyzed, it will soon heat up and put off fumes. When finished with catalyzed chemicals, or if they start to build up heat, submerse completely in water until cool.

BOTTOM PAINT

If your boat is left in the water for more than a few days at a time, the hull bottom below the waterline should be painted with anti-fouling paint to protect it from marine growth and barnacles that hinder performance. Since anti-fouling paint slowly dissolves, yearly inspection and cleaning of the hull bottom to prevent marine growth is advised. Repaint when necessary. To help prevent blistering, use an epoxy barrier coat to be applied in conjunction with the anti-fouling paint.

CANVAS

Grady-White’s canvas is made using the highest quality vinyl and latest sewing techniques. The canvas will not be completely leak proof. The seam holes in your canvas may stretch and tend to leak. However, you can correct this problem by applying Apseal® or Uniseal™ to the seams.

Please understand that Grady-White does not warrant the fit and design of the canvas to be entirely watertight.

Maintenance

To maintain your boat's top and other canvas follow these guidelines:

Fabric should be cleaned regularly to prevent the buildup of soil and soil penetration of the fabric. Simply brush off any loose dirt, hose down canvas and clean with a mild solution and warm water. Do not use petroleum-based or ammonia cleaners on canvas or clear vinyl as they will yellow. For heavily soiled fabric, remove from the frame. Soak the fabric in a solution of 1/2 cup (.12 L) of Clorox® and 1/4 cup (.06 L)of Ivory® or Lux® soap per 1 gallon (3.8 L) of warm water. Let soak until mildew and stains can be brushed out with a common kitchen brush. Rinse thoroughly with cold water until all soap is removed. Allow fabric to air dry completely. **Do not steam press or dry in an electric or gas dryer.** This will damage the canvas fabric. Water repellent was applied to your canvas during manufacturing. The repellent may have diminished after extended cleaning. Re-treatment of the fabric is recommended. Do not use wax-based products. Use a water based repellent like Apseal® or Uniseal®. Scotchguard® is effective for short-term use only.

Snaps and Zippers

To protect the snaps and zippers on your boat's canvas and cushions from corrosion and binding, Grady White includes a snap/zipper assist tool and a tube of lubricant (E-Z Snap®) in your owner's packet. The lubricant, manufactured by IOSSO (part number 10909), should be applied per the manufacturer's directions during the initial use of your canvas and cushions. The lubricant should be reapplied every 3 months or sooner depending on your boating environment and usage. The snap/zipper assist tool included in your owner's packet should be used whenever you remove the canvas, cushions, or operate the zippers to prevent damaging or tearing the material. Contact your dealer if you need to replace your assist tool or reorder the lubricant.

Vinyl

- Clean clear vinyl thoroughly with denatured alcohol and apply a protective layer of clear wax. **Do not** use paste wax, as it will turn the vinyl yellow. This process should be repeated as necessary to maintain the protective wax coating.
- Store and secure canvas before trailering.
- Dry all canvas before storing to prevent mildew.
- Remove the top, front, and side panels. **Roll** them for storage. This is necessary to prevent the front and side vinyl pieces from cracking. **Never fold these pieces!**

Storage

Consider the following steps when putting your folding top canvas option in the stored position:

- Fold the top and zip it into the canvas cover provided.
- Pivot the covered top into the stowed position on the foredeck. The canvas cover is equipped with a strap on each side and an eyelet in each strap. Place the eyelets over the male fasteners located on the port and starboard foredeck.
- Twist the male fastener 90 degrees to engage.

⚠ CAUTION
Secure the folded top when in the stowed position to prevent damage or the loss of your canvas.

UPHOLSTERY

Your exterior vinyl upholstery may be cleaned with a mild solution of household detergent and fresh water. Commercial cleaners for vinyl also work well. Since the seams of your exterior upholstery are not waterproof, your upholstery should be stored in the cabin or covered when not in use. Exterior cushions will trap moisture between themselves and the gel coat. If a cushion is not removed to allow the moisture to dry, blistering of the gel coat may occur. Cockpit bolsters may be removed if you desire. These bolsters clip onto brackets mounted to the deck structure. Screws are then installed through the underside of the bolster to hold them in place. Most cabin cushions are removable and may be dry-cleaned or steam cleaned.

⚠ CAUTION
Do not machine wash cabin fabrics.

POLYETHYLENE/PLEXIGLASS/VINYL

In the cockpit area of your boat, plexiglass and vinyl are used for trim and polyethylene is used for the toe rails and rod racks. Routine maintenance for vinyl should include regular cleaning with soapy water and the application of a surface protector at least twice per year. Polyethylene can be cleaned with products such as 409 or any spray and wipe cleaner. Plexiglass can be maintained with mild soap and water and a soft cloth.

SCUPPERS

Grady-White boats have self-bailing cockpits meaning water on the cockpit floor drains by gravity through large aft scuppers and **not** into the bilge. The aft drains (scuppers) have an external scupper flap assembly that restricts the flow of water back into the boat. Inspect the flaps periodically to make sure they are free of debris. The scupper flaps may need periodic replacement if the rubber becomes damaged or no longer seals properly in the thru-hull.

CAULKING/GASKET

Deck fittings, bow rails, windows, hatches, etc. have been caulked or gasketed with the highest quality material to ensure a waterproof joint with the boat. However, the working action of normal use will tend to flex the joint and eventually break down the seal between them. Periodically inspect the caulking or gaskets for leaks. Recaulk or replace the gaskets as necessary, or have your dealer do the repair.

HARDWARE/STAINLESS STEEL RAILS

The hardware on your Grady-White is made of laboratory grade 316 stainless steel and needs regular cleaning to maintain its “less staining” properties. The key to maintaining your stainless steel is to keep it clean with a mild solution of soap and **fresh** water. Remove salt or dirt from your stainless steel on a regular basis.

HARDWARE MOUNTING

Ensure all holes are sealed properly when mounting hardware in the boat surface. Sealing will prevent water leakage. This is crucial in fiberglass areas that have been reinforced with plywood. A hole sealed improperly allows water inside the fiberglass leading to saturation of the plywood reinforcement.

MAINTENANCE PROCEDURE FOR ANODIZED ALUMINUM COMPONENTS

(Lean Bars, Rod Holders, T-top and Hardtop Frames, Outriggers, Etc.)

Due to the nature of anodized aluminum and the harsh exposure conditions of the marine environment, it is important to follow a **required maintenance procedure**. Failure to follow a preventative maintenance procedure will most likely result in aluminum pitting.

These parts must be washed periodically with a very mild soap and water solution. Grady-White recommends washing with a mild soap (such as Ivory® Liquid) after each use and every two to three weeks if stored in an outside marine environment. Strong cleaners and soaps must not be used. Never use abrasive cleaners or products that contain chlorine bleach. These products can remove the anodized coating.

Give special attention to the upper tubes of a hardtop or T-top frame. The area just below the top is shielded by the canvas or fiberglass top and does not receive the natural rinse that rainwater provides. Failure to thoroughly clean and maintain this area will allow contaminates that attack the anodized aluminum to remain on the frame.

For maximum protection, coat parts with a non-abrasive metal protector. The best protectors will displace moisture, remove contaminates, and leave a wax film protecting the anodized aluminum. Follow the application guidelines for the product you choose. A sample of one metal protector has been provided with your boat.

METAL PROTECTORS:

Boeshield T-9	Aluma Guard	Premier Polish
PMS Products Inc.	Rupp Marine, Inc.	Aquatech by Nautical Choice
76 Veterans Dr.	4761 Anchor Ave.	6726 Netherlands Drive, Suite 200
Holland, MI 49423	Port Salerno, FL 34992	Wilmington, NC 28405
800-962-1732	866-477-2678	800-853-7760
www.boeshield.com	www.ruppmarine.com	www.aquatech-marine.com

⚠ CAUTION

Do not use abrasive cleaning products, pads, steel wool or steel brushes. These products will damage the finish.

FUEL SYSTEM MAINTENANCE

To determine whether a fuel flow problem is in your fuel system or your engine, follow this simple method. Connect a six-gallon (22.7 L) portable tank to the engine and operate the engine. If the problem persists, the likely cause is with the engine itself. If the problem goes away, the source must be in the boats' fuel system. One component that should be inspected if a restriction occurs is the anti-siphon valve. If fuel does not flow properly through this part, it must be cleaned and/or replaced.

⚠ WARNING

Do not remove the anti-siphon valve and replace with a regular barb. Modification or removal of the anti-siphon valve could allow a dangerous accumulation of fuel and vapors in the hull in the event of a fuel system leak.

Annually conduct a detailed inspection of fuel system components, especially those hidden from routine inspection. Replace any fittings, deteriorated hoses, clamps or connections immediately. Fuel filter/water separators should be replaced at least annually.

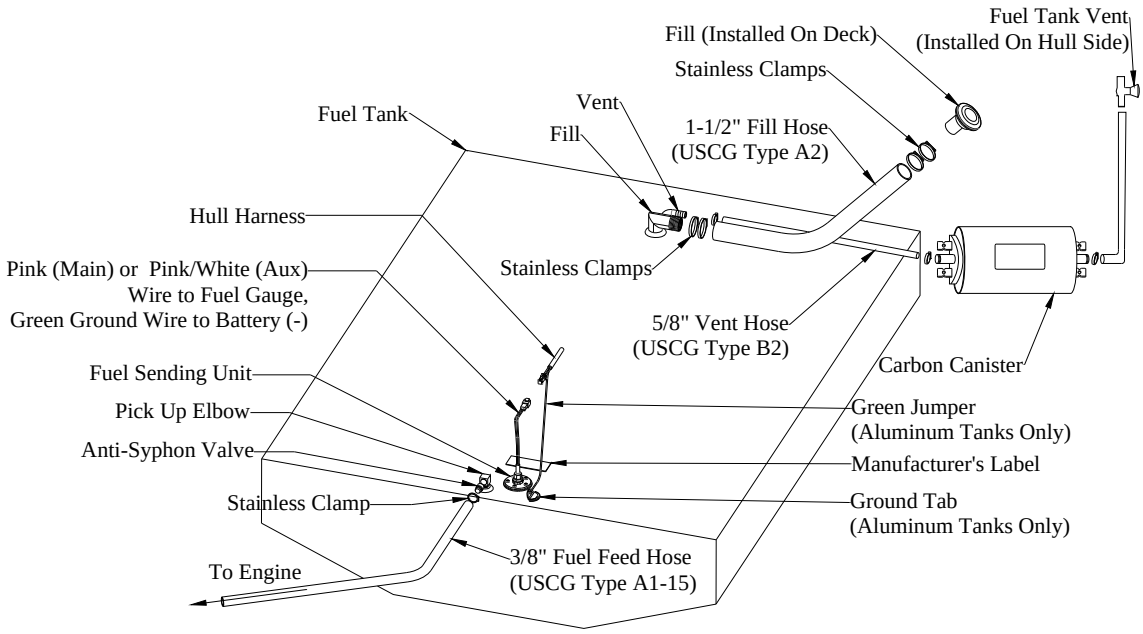

FUEL TANK COMPARTMENT

The fuel tank compartments need to be rinsed periodically especially when used in a salt-water environment. Dirt accumulation attracts salt, creating salt crystals. Salt crystals can corrode most metal surfaces if left untreated over a period of time. To help protect your fuel tank from corrosion, rinse the compartment with **fresh** water. After rinsing, make sure all water is drained from the compartments. Remove the access plates from fuel tank lids and inspect this area for leaks or unsecured lines.

The access plates on your fuel tank lids keep the fuel compartments sealed. Over time, the opening and closing of these plates causes the o-rings to wear out. Replace these o-rings as necessary to maintain the watertight integrity of the plates.

SHOWER SUMP

A shower in the head compartment drains into a contained “sump” which is used to prevent hair, soap, scum and bacteria from accumulating in the bilge and creating odors. This sump should be cleaned regularly. The sump pump box contains a filter. Remove the filter and rinse with water to clean. The filter should always be installed when using the shower to prevent the sump pump from becoming clogged.

BATTERIES

Proper battery power is essential to the operation of your vessel. For this reason, Grady-White has carefully chosen a battery with cranking ability and reserve capacity sufficient to meet your needs. The factory installed Deka Marine Master 27M6 battery is a maintenance free battery. This battery utilizes an exclusive demineralized electrolyte and maintenance free calcium alloy grids. These features reduce water loss and extend the life of the battery. However, this battery is maintenance accessible in the unlikely event a charging malfunction occurs. Grady-White recommends the Deka 27M6 product for all replacement applications. If your boat is equipped with batteries not installed at the factory, consult with the battery manufacturer for proper care and maintenance instructions and the engine manufacturer for appropriate battery specifications.

Wet cell batteries must be secured in a non-metallic tray to contain electrolyte spills. An insulated boot should cover battery terminals. Keep terminals clean by scrubbing them with a stiff brush and a mixture of baking soda and water. Afterwards, apply a light coat of grease or corrosion preventative.

Batteries contain sulfuric acid, a harmful and potentially volatile chemical. When handling batteries, exercise caution and follow these guidelines.

- Avoid contact between skin, eyes, or clothing and sulfuric acid.
- Protective gloves, eye wear, and clothing should be worn when servicing to minimize risk to yourself.
- Batteries produce explosive gases. Keep sparks, flames and cigarettes away. Ventilate when charging or using in an enclosed space.
- Keep out of reach of children.

This is not a complete set of guidelines. It is your responsibility to safely maintain your batteries and avoid injury. Use good judgement and remain alert to prevent an accident. In the event of an accident or exposure to electrolyte, immediately seek prompt medical advice or attention.

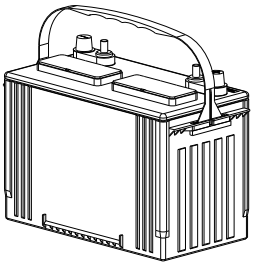

⚠ WARNING

Do not allow any electrically conductive material to make contact with both the positive and negative terminals at the same time (i.e. a hand tool used when disconnecting and reconnecting battery cables). A short of this nature can cause severe burns and create dangerous sparks which could result in personal injury and/or property damage.

⚠ CAUTION

When disconnecting and reconnecting battery cables, the black cable must be connected to the negative terminal and the red cable must be connected to the positive terminal. Reversing these connections will immediately damage your system.

Never disconnect the battery when the engine is running. This can cause damage to the charging system. When replacing your battery, use the same brand and type as the factory installed battery. If this is not available, reference your engine Owner's Manual for recommended battery type and required performance specifications.

LED LIGHTING

LED (light emitting diode) fixtures do not have bulbs and are not serviceable. LED's have extremely long life and should not need replacement during the life of the boat. In the event of damage or malfunction, the entire light assembly should be replaced. See your Grady-White dealer for replacement LED lights.

290-305 330 335 336 375 & 376 DC ACCY WIRING COLOR FUSE/BREAKER

Accessory	Wire	Amperage	Location
Lights			
Bow Lights	14 ga. Gray	10.0	Accessory Panel
Cabin Lights	16 ga. Blue/Green 14 ga. Blue/Green 330	10.0 20.0 (330)	AC/DC Panel
Cockpit Lights	14 ga. Blue/Yellow	10.0	Accessory Panel
Livewell Light	16 ga. Blue/Red	w/ Livewell Pump	Accessory Panel
Mast Light	14 ga. Gray/Red	w/ Bow Light	Accessory Panel
Panel Lights	16 ga Dark Blue	w/ Nav Lights	Accessory Panel
Spreader Lights	14 ga Dark Blue/White	10.0	300 & 336 Fwd light HT Fuse Block / 305, 330 & 336 accessory switch panel
Pumps			
Aft Bilge Pump (330 / 336 Fwd):			
Rule 1500	16 ga. Brown	8.0	Accessory Panel
Auto Float Switch (Aft)	16 ga. Brown/White	8.0	Battery Select Box
Fwd Bilge Pump:			
Rule 1100	16 ga. Brown/Black	6.0	Accessory Panel
Auto Float Switch (Forward)	16 ga. Brown/Red	6.0	Battery Select Box
Head Pump (Discharge)	14 ga. Orange/Gray	10.0	AC/DC Panel
Head Pump (Vaccum)	14 ga. Orange/Red	10.0	AC/DC Panel
Livewell Pump: Sentry 1100 GPH	16 ga. Orange/Brown	6.0	Accessory Panel
Power Assist Pump (main)	8 ga. Red	50.0	Battery Compartment
Power Assist Pump (ignition)	16 ga. Purple	5.0	Yamaha ignition panel (in line)
Shower Sump Pump (Float Switch)	16 ga. Brown/Orange	2.5	AC/DC Panel
Washdown Pump	12 ga. Orange/Brown	15.0	Accessory Panel
Water Pressure Pump	12 ga. Orange/Blue	15.0	AC/DC Panel
Anchor Windlass			
Main Positive	6 ga. Red (300 & 305) 2 ga. Red (330, 336, 376)	35.0 (300 & 305) 90 (330, 336, 376)	Battery Select Box
Positive to Switches	14 ga. Red	5.0	Accessory Panel
Down	14 ga. Green/Orange	N/A	N/A
Up	14 ga. Blue/Orange	N/A	N/A
Miscellaneous			
12 Volt Accessory Outlets	10 ga. Red/Orange	15.0	Fuse Block
Amplifier	10 ga. Red	N/A	N/A
Amp Remote	16 ga. White/Purple	11.0	Fuse Block
Accessory Negatives (Branch)	Black [1]	N/A	N/A
Accessory Negatives (Mains)	2, 6, or 10 ga. Black	N/A	N/A
Accessory Power Lead	2, 6, 10 ga. or 2/0 Red	50.0	Battery Select Box
Blower (305,330 Head)	16 ga. Brown/Green	4.0	Fuse Block
Blower (Bilge)	10 ga. Brown/Yellow	4.0 7.5 (376)	Generator Panel
Bow Thruster Positive	4/0 Red	250 400 (376)	Battery Compartment
CO Detector	16 ga. Red/Black	1.0	Positive bus (in line) / 336 console fuse block
Constant 12V (Memory, High Bilge Alarm)	16 ga. Red/Pink	10.0	Battery Select Box
Diesel Sender	16 ga. Orange/Gray	N/A	N/A
High Bilge Alarm Sender Wires	16 ga. Red/White Sender 16 ga. Brown/Pink Return	N/A	At panel and Float switch
Electronics Box Ram (305, 330 & 336)	16 ga. White	5.0	Accessory Panel
Fuel Grounds	16 ga. Green	N/A	N/A
Fuel Tank Sender (Auxiliary)	16 ga. Pink/White	N/A	N/A
Fuel Tank Sender (Main)	16 ga. Pink	N/A	N/A
Diesel Tank Sender	16 ga. Pink/Blue	N/A	N/A
Diesel Gauge	16 ga. Pink/Red	5.0	AC/DC Panel
Hardtop Negative (Main)	10 ga. Black/Blue	N/A	Negative Bus
Hardtop Power Lead (Main)	10 ga. Red/Blue	40.0	Console fuse panel 305 only
Horn	12 ga. Orange/White	10.0	Accessory Panel
Hydraulic Trim Tabs	14 ga. Orange	20.0	Fuse Block
Refrigerator	10 ga. Orange/Yellow	15.0	AC/DC Panel
Seakey Float (300 only)	16 ga. White/Red	N/A	N/A
Stereo	16 ga. Red	10.0	AC/DC Panel
TV/DVD	10 ga. Red/Green	10.0	AC/DC Panel
Windshield Wiper (Actuator)			

Chapter 7: Winterization and Storage

GENERAL

Boats stored during the winter or for an extended period of time require some routine maintenance. The boat and its systems should be checked for maintenance and repairs prior to and during the storage process. Arrange repairs during the storage period to reduce downtime during your boating season.

Avoid costly damage and delay when launching your boat by having it stored and winterized properly. This information is presented as a general guide; the actual storage should be performed by a professional and qualified dealership. See page 61, in *Sportfish, Cruisers, Yachts Owner's Manual* for a checklist on winterizing and storage.

BOAT STORAGE

Grady-White boats are equipped with stern eyes and a bow eye. These eyes are for anchoring and trailering purposes, and should be inspected regularly to insure structural integrity.

⚠ WARNING
Boats over 30' should not be lifted for storage using the bow and stern eyes. Use slings for lifting.

Slings must be used for lifting your Grady-White to prevent damage to the boat. To avoid personal injury and property damage, it is advised to take extra precautions when lifting or moving the boat for storage.

While transporting a boat by a lift or fork lift, the structure should remain as close to ground level as possible. If slings are necessary for lifting or transporting, they should be in proper condition and tied together to prevent any movement (separating or slipping) which could cause damage to the boat. If fork lifts are used to move the boat, the forks should be padded, contoured to match the hull bottom, and in a secure location under the hull in alignment with the stringers. The forks should be long enough to prevent the boat from rocking forward and aft causing it to become unbalanced. Always verify the fork lift's capacity to ensure it is sufficient for the weight of the boat. Other conditions that should be considered before hauling, transporting, or storing your boat include overhead lines, ground conditions (frozen or soft), and storm conditions that may arise.

When storing your boat on the trailer, raise and block the trailer axle to prevent tire deterioration. This is an excellent time to lubricate and pack the wheel bearings per the manufacturer's instructions.

Make sure the keel, chines and transom are fully supported. Indoor storage is beneficial particularly if your climate produces freezing weather. The storage unit should not be airtight, but should be ventilated. Ventilation is extremely important both around and through the boat.

For outdoor storage, a canvas cover should be used to prevent “sweating”. One method is to build a frame over the boat to support the canvas. It should be a few inches wider than the boat so the canvas will clear the rails and allow passage of air. The cover should be fastened securely so that winds cannot remove it or cause it to chafe the boat. A poor covering job will eventually cost more than the price of a well-made cover.

⚠ WARNING

Boats covered with plastic shrink wrap during storage must leave the vent fitting outside of the enclosure to prevent the trapping of dangerous fumes.

CLEANING AND LUBRICATING THE BOAT

Clean and wax your boat before storage. If you store your boat in the water, there may be a layer of growth on the bottom. As it dries, this debris will harden. Clean, scrub and scrape the bottom promptly when the boat is removed from the water. Remove all marine growth and other foreign matter from the hull. Clean the inside of hull openings, thru-hull fittings and scupper drains. Inspect the hull for damage. Avoid harsh cleaners, citrus solutions and bleaches; these could have harmful effects on your boat’s gel-coat and metal components.

Check cleats and rails for corrosion and tightness. Clean stainless steel as directed under *“Hardware/Stainless Steel Rails” on page 6–5*. Use a quality metal preservative like T-9® on metal surfaces to prevent salt water damage. Check for loose silicone, hinges and unseated gaskets. Replace or tighten where necessary. Heavy seas pounding and twisting the hull can cause leaks in your windows, doors and hatches. Check hinges for corrosion. Lubricate hinges as necessary.

The T-9® metal protection product was developed by Boeing® Aviation for long-term protection of aircraft. It works by coating and penetrating fasteners and fixtures, displacing moisture and drying to a clear wax film that lubricates and protects metals for months. T-9® can be used to protect deck hardware, engines, electronics, and fishing tackle.

DRAINING AND WATER SYSTEM

If the boat is stored out of water, remove the garboard drain plug to keep the bilge dry. Store your boat with the bow elevated for drainage.

Drain all water tanks, hoses, filters and pumps to prevent freeze damage. The fresh water system may be drained by running any faucet until the tank is empty. When empty, turn the water pump off to prevent damage. Remove the filter on the freshwater pump inlet, remove any water and reinstall. Residual water will not damage the tank. The water heater must be drained individually after emptying the water tank. Drain the water heater by opening the drain faucet on the water heater. The water from the water heater will drain into the bilge. If desired, the fresh water system may have a non-toxic antifreeze for potable water systems added. To drain other systems, close seacocks and run the pumps until the lines are dry. Open the seacocks after lines are dry if the boat is stored out of the water. Draining will help prevent water stagnation in warmer climates.

HEAD SYSTEM

Empty toilet and holding tank making sure all water is cleared. Reference Owner's Packet for manufacturer's information on winterization. Water should be removed from deck pump-out hoses.

Drain portable heads. Remember to drain the upper and lower tanks. Water should be removed from deck pump-out lines.

BATTERIES

Fully charge the batteries before storing. A weak battery loses its charge more rapidly than a strong battery. Coat the battery terminals with grease to prevent corrosion.

ENGINES

See your engine Operator's Manual regarding the winterizing procedures. Follow instructions carefully, and your engine will withstand severe weather conditions. Change all filters. Check hoses and clamps. If you have developed any vibrations during the season, look for loose engine bolts, bent shafts or bent propellers.

FUEL SYSTEM

The fuel systems should be winterized by following the fuel system maintenance and fuel tank compartment instructions in the maintenance and service section. Tanks should be kept filled when the boat is not in use to reduce the accumulation of moisture and condensation. Add stabilizer to fuel that won't be used in 60-90 days. Use fuel stabilizer specifically designed for alcohol blended fuel if using E10 gasoline.

STORAGE CHECKLIST

In addition to winterization guidelines the following checklist can be used as a guide for storing your boat. Additional details should be added as needed for your personal application.

- Remove all loose items and personal effects.
- Remove any detachable and valuable equipment such as electronics. Store all electronics inside. Your compass should be covered for the winter. Ultraviolet rays from the sun will cloud the compass and make it difficult to read.
- Winterize all equipment as directed in the manufacturer's manuals.
- Store cushions indoors to prevent mildew.
- Clean the exterior and interior of the boat. Remove all grease, oil, salt spray, etc.
- Remove garbage. Clean storage areas, fish boxes, and livewells. Prop fishbox lids open.
- Lubricate hinges, valves, the backs of electrical panels, and other surfaces that will rust.
- Check underwater items. Hardware should be in good condition and tight.
- Inspect electrical systems and have any repairs performed.

GETTING BOAT OUT AFTER STORAGE

Before placing your boat in the water for the boating season, have the hull bottom sanded and reapply anti-fouling bottom paint if necessary. Leave as much equipment and personal effects as possible off the boat until after launch and final check.

PRIOR TO LAUNCHING

Start your own personalized list of items to check and perform prior to placing your boat in the water. The following list will give you some ideas and suggestions:

- Check all gear and replace if necessary.
- Check thru hull fittings for cleanliness, damage, and tightness.
- Check prop installation and tightness.
- Clean battery terminal posts with a wire brush or bronze wool. Apply a light coating of grease to posts to prevent corrosion.
- Check all wire connections for contact corrosion and tightness.
- Check hull seacock ball valves for easy operation and for condition of hose.
- Check operation of bilge pumps in manual and automatic modes.
- Check shower sump pump (if installed).
- Check operation of all AC (if applicable) and electrical circuits.
- Check the hoses on the fresh water system, and close all valves, fill fresh water system and check for leaks.
- Perform maintenance on engines according to the manufacturer's manuals prior to returning them to service.
- Check all engine and steering control cables and linkage for operation. Lubricate cables and linkage as necessary.
- Check safety equipment including flares, fire extinguisher and first aid kits. Replace items as necessary.

AFTER LAUNCHING

- With the boat in the water, check all sources of possible leaks stem to stern.
- Thoroughly check the fuel system including lines, fittings, connections, valves, and filters for leaks.
- Connect to shore power (if installed). Check all electrical equipment, lights, water heater, air conditioning system, battery charger operation, etc.
- Check operation of toilet (reference manufacturer's manual).
- Test run engines and generator (if installed) as directed in manufacturer's manual.

Chapter 8: 305 Express

Specifications

Beam-amidship	10’ 7” (3.2 m)
Bridge Clearance w/Hardtop	9’ 9” (2.9 m)
Keel To Top Of Windshield Bar	9’ 10” (3.0 m)
Centerline Length	30’ 6” (9.3 m)
Centerline Length w/Bow Pulpit	32’ 7” (9.9 m)
Freshwater Capacity	32 Gallons (121 L)
Fuel Capacity - Main	140 Gallons (530 L)
Fuel Capacity - Aux	128 Gallons (484.5 L)
Hull Draft	23” (58 cm)
Engine Shaft Length	25” (64 cm)
Transom Width	9’ 6” (2.9 m)
Dry Weight	8850 Lbs (4014 kg)
Steering Type	Hydraulic Tilt
Steering Hose Length	Helm to Tee – 21’ (6.4 m)
	Tee to Port – 7’ (2.1 m)
	Tee to Stbd – 4’ (1.2 m)
Control Cable Length	28’ Port (8.5 m)
	26’ Stbd (7.9 m)
Maximum Outboard HP	700 HP (522 kW)

Optional Features

ACCESSORIES

- Air conditioning
- Bow thruster
- Flat screen TV w/DVD player & audio visual inputs
- Generator - 4 kW diesel, 12 gallon (45.4 L) fuel capacity
- Hardtop top mounted rod holders (6)
- Hot water cockpit shower
- Outrigger kit - 15 ft (4.6 m) radial hardtop mounted
- Outrigger kit - 24 ft (7.3 m) Lee Pro Series (lay out)
- Painted hull
- Seating - deluxe helm chair III w/flip bolster
- Sirius satellite radio system
- Steering - power assist (standard w/TF350 package)
- Underwater lighting
- Yamaha Helm Master™ control system

Operation Of Standard Features

SWITCH PANELS

At the helm you will find an accessory switch panel. An additional switch panel is located above the port cooler in the cockpit. The livewell, washdown, and spreader lights switches make up this cockpit switch panel. Refer to the *"290-305 330 335 336 375 & 376 DC Accy Wiring Color Fuse/Breaker" on page 6–10* for overcurrent protection amperage ratings for each circuit. Also see *"12 Volt DC Cockpit Switch Panel Diagram" on page 8–37* and *"12 Volt DC Helm Switch Panel Diagram" on page 8–38* for switch panel wiring diagrams. Consult your dealer for specific information or questions on the accessories included on your boat.

- **Aft and Forward Bilge Pump**
  These two-way switches serve as manual switches for each bilge pump. These switches operate independently of each other. Two circuit breakers located above each switch provide over-current protection at the panel for each bilge pump circuit.
- **Cockpit Lights**
  The cockpit lights (blue) provide illumination in the cockpit and helm areas. A circuit breaker located above this switch provides over-current protection for this circuit.
- **Electronics Box**
  This momentary switch activates the lift which opens and closes the raisable electronics box at the helm. A circuit breaker located above this switch provides over-current protection for this circuit.
- **Horn**
  This momentary switch activates a horn which meets the requirements of the USCG for sounding devices. A circuit breaker located above this switch provides over-current protection for this circuit.
- **Livewell**
  This switch activates the livewell pump and light. A circuit breaker located above this switch provides over-current protection for this circuit.
- **Navigational/Anchor Lights**
  This three-position switch (NAV-OFF-ANC) changes the lighting configurations to running or anchor lights. A circuit breaker located above this switch provides over-current protection for this circuit.
- **Spreader Light**
  This switch activates the hardtop spreader lights. A circuit breaker located above this switch provides over-current protection for this circuit.
- **Underwater Lighting (optional)**
  This switch activates the underwater lights. A circuit breaker located above this switch provides over-current protection for this circuit.
- **Washdown**
  This switch activates the washdown system. A circuit breaker located above this switch provides over-current protection for this circuit.

- **Windlass**
  This switch operates the anchor windlass. Depress the top of the switch to raise the windlass and the bottom of the switch to lower the windlass.
- **Windshield Wiper**
  This switch powers the windshield wiper(s). A circuit breaker located above this switch provides over-current protection for this circuit.
- **Accessory**
  Switches and breakers labeled "ACC" are blank. They may be used for non-factory installed accessories. A circuit breaker located above this switch provides over-current protection for this circuit. See *"290-305 330 335 336 375 & 376 DC Accy Wiring Color Fuse/Breaker" on page 6–10* for recommended breaker amperages. Switch labels are available from your dealer for non-factory installed options.

NOTICE
Use anti-corrosion spray on the back of panels and on exposed wires to prevent the rust or corrosion that could lead to an electrical system failure.

OTHER SWITCHES

- **Trim/Tilt**
  The trim/tilt switch is located on the throttle control. Trim changes the angle of thrust of the engine (reference *"Trim" on page 4–1*). Tilt raises the drive unit for trailering.
- **Trim Tab**
  These switches control the hydraulic trim tabs used for adjusting the attitude of the boat. See *"Trim Tabs" on page 8–12* for more details.

NOTICE
Use anti-corrosion spray on the back of panels and on exposed wires to prevent the rust of corrosion that could lead to an electrical system failure.

AUXILIARY FUSE PANEL

The auxiliary fuse panel located at the center helm station behind an access door provides a source of power for electronics and additional accessories. Your model utilizes the automotive type fuses.

MAIN CIRCUIT BREAKER

There is a 50 amp circuit breaker located in the panel beneath the battery select switches. This is the main breaker protecting the wiring supplying power to the accessory switch panel. If this breaker is tripped, moving the arm back to the “on” position will reset it.

ACCESSORY OUTLET - 12 VOLT

Three 12-volt outlets are installed on your 305. They are located in the port deck wing insert on the vertical surfaces in front of the cup holder, on the starboard side of the helm facing outboard, and in the cabin near the galley rail light. These outlets provide easily accessible power supplies for accessories such as cellular phones and spotlights.

NOTICE
These outlets cannot be used with a cigarette lighter.

BILGE PUMP WITH FLOAT SWITCH

Your boat is equipped with automatic float switches adjacent to the bilge pumps. A float switch will enable the pumps to come on automatically if a significant amount of water accumulates in the bilge. The float switches function independently of the battery select switches and can activate the bilge pump with the battery select switches in the “off” position. The bilge pumps are also equipped with switches at the helm. When a switch is in the “on” position, the pump will run continuously. The pump should not be left on unless someone is monitoring the system and can turn the pump off when the bilge is dry. When a switch is in the “off” position, the pump is off unless activated by the float switch.

⚠ CAUTION
To prevent damage to the bilge pump, do not run it dry for a prolonged period of time.

BILGE PUMP LOCATIONS

Your boat has two bilge pumps. One is located in the aft bilge and can be accessed by opening the aft rigging lid in the cockpit floor. The second is in the rigging area under the aft berth. This pump can be reached through the lift outboard under the center aft berth cushion.

COMPASS

The compass is located at the helm station in direct view of the operator when navigating the boat. Following the compass instructions included in the “Owners Packet” will help you make compensation adjustments.

HIGH BILGE WATER ALARM

Your boat is equipped with a high bilge water alarm. Although some residual accumulation of water in the bilge is normal, this alarm will alert you if water reaches a high level that could impair operation of the boat or be damaging to equipment. It is activated by a float switch located in the forward bilge. This float switch is separate from the bilge pump system and only activates the high bilge water alarm. The alarm panel (pictured below) provides both audible and visual alert signals. This panel is located inside the cabin above the vee berth light switch. When activated, the red light on the switch will be on and a high pitched tone similar to that of an in home smoke detector will sound. This is the recommended position to leave this switch. With the audible alarm off, the red light will be the only indication of a high water situation.

Should the high bilge water alarm activate, immediately investigate to determine the source of water entry. Also, confirm your bilge pumps are working properly. If the situation cannot be quickly resolved, contact your dealer and remove the boat from the water. See *"12 Volt DC High Bilge Water Alarm Diagram" on page 8–45* for wiring detail.

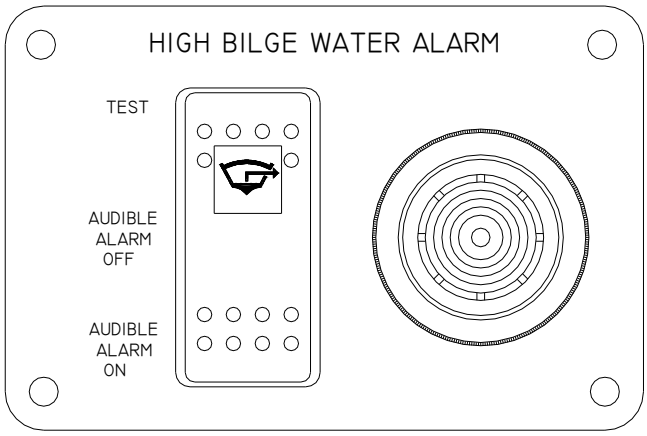

COCKPIT SHOWER

To operate the cockpit showers, the water pressure switch located on the DC panel must be in the "on" position. For the aft shower, open the cover and pull the shower wand from the recessed deck fitting. Depress the button on the back of the wand to spray water. To reinstall the aft shower wand into the recessed fitting, gently feed the hose down through the deck and replace the cover on the fitting. For the forward shower, pull out the hose and depress the lever on the back of the wand to spray water. For continuous or hands free operation, pull up on the lever until it reaches the locked position. To reinstall the forward shower wand, gently feed the hose down through the deckwing and replace the cover on the fitting. To supply the optional hot water to the cockpit showers, make sure the hot water heater is on *(reference "Water Heater" on page 8–10)*, then adjust the mixer knob located at the cockpit showers. The water pressure pump is located in the port aft berth rigging area and may be accessed by removing the provided access panel. Reference *"Pressurized Freshwater System" on page 8–28* for a layout diagram.

DOCKSIDE POWER

The dockside power feature allows the use of AC equipment on board the boat. This equipment includes any permanently installed appliances such as a battery charger or water heater, or it may be a household item plugged into a receptacle. The dockside power is utilized by connecting the heavy-duty cable supplied with the boat to an appropriate external power source. This cable provides power to the boat's AC inlet that is wired to the AC panel. The AC panel allows for distribution to the various appliances and outlets. See the *"Dockside Wiring" on page 8–30* for more information on component location and wiring specifics.

⚠ CAUTION

Always disconnect the dockside power cable if leaving the boat unattended for an extended period of time.

Connecting The Dockside Power

1. Verify that the external power source is a 3 wire grounded system with amperage and voltage ratings compatible with the boat's AC system ratings.
2. Be sure there is sufficient cable length to allow for normal movement between the boat and the dock.
3. Turn all AC panel switches (including the main) to the "off" position. Turn the circuit breaker under the starboard gunwale to off. Turn the circuit breaker at the dock outlet to off.
4. Connect the dockside power cable at the boat inlet first.
5. Connect the dockside power cable at the dock outlet and turn the dock outlet circuit breaker to on.
6. Turn the circuit breaker under the starboard gunwale to the "on" position. Note: Test circuit breaker monthly by pressing the test button and then resetting.
7. Turn the shore circuit breaker on the AC panel to the "on" position.

⚠ WARNING

If the reverse polarity indicator on the AC panel is activated, immediately disconnect the dockside power cable, and have a qualified electrician correct the fault.

Disconnecting The Dockside Power

1. Switch all circuit breakers at the boat's AC panel off.
2. Switch the circuit breaker under the starboard gunwale off.
3. Switch the circuit breaker off at the dock outlet.
4. Disconnect the dockside power cable at the dock outlet first.
5. Disconnect the dockside power cable at the boat inlet.

NOTICE

Keep inlet cover closed tightly when not in use.

FRESHWATER WASHDOWN

To operate the freshwater washdown, depress the water pressure switch on the accessory switch panel. This system will now be pressurized at the “freshwater” washdown outlet. A hose with a spray nozzle attached may be used intermittently without turning the switch off in the same fashion as a home garden hose with a nozzle. The freshwater pump has an internal pressurization switch that will maintain water pressure as needed until the switch is turned off at the switch panel.

HARDTOP

Do not use the hardtop for storing heavy or large items such as a raft. The frame for the top is designed for continual use with antennas, radar, and outriggers. The additional weight caused by larger items such as a raft may cause damage to the frame structure.

HEAD SHOWER

The water pressure switch located on the DC panel activates the head shower. After turning this switch to the “on” position, the shower water flow can be controlled by the head shower fixture.

SEACOCKS

Ball valve seacocks are installed on the thru hulls for the livewell, washdown, air/cooler pumps, generator systems and some head features. It is necessary for the seacocks to be in the “open” position for operation. The “open” position is identified by the orientation of the handle. If the handle is in line or parallel to the body of the valve, the seacock is in the “open” position. If the handle is perpendicular to the body of the valve, the seacock is in the “closed” position. For seacocks with remote arms installed, the “open” position can be obtained by pulling up on the remote arm attached to the seacock handles. Pushing down on the remote arm closes the seacock.

⚠ CAUTION
All seacocks should be in the “closed” position if not in use or if the boat is unattended to prevent the taking on of water if a plumbing component fails.

TRANSDUCER FLATS

The inverted transducer flats are designed primarily for a bronze style torpedo-shaped transducer. An example of a torpedo shaped unit would be an Airmar Tri-Transducer. This transducer is approximately ¾” thick. This thickness allows the transducer face to protrude below the bottom of the hull. An additional ½” spacer may be installed between the hull bottom and the transducer for optimum results. The transducer should be installed as far forward on the flat as possible, and parallel with the keel.

NOTICE
A flush mount style transducer will not work with the inverted flat.

WINDSHIELD WASHER VALVE

A valve located at the helm controls your windshield washer. Water may be sprayed on the windshield, by opening this valve with the Freshwater System pressurized. To pressurize, locate the water pressure switch on your boat's DC panel, and place it in the "on" position.

AC POWERED ACCESSORIES

AC/DC Panel

The Express 305 AC/DC panel is located in the wire cover box on the aft wall of the cabin. AC and DC powered switches are noted below. See *"AC/DC Panel Wiring – One-Line Diagram" on page 8–35* for a wiring diagram.

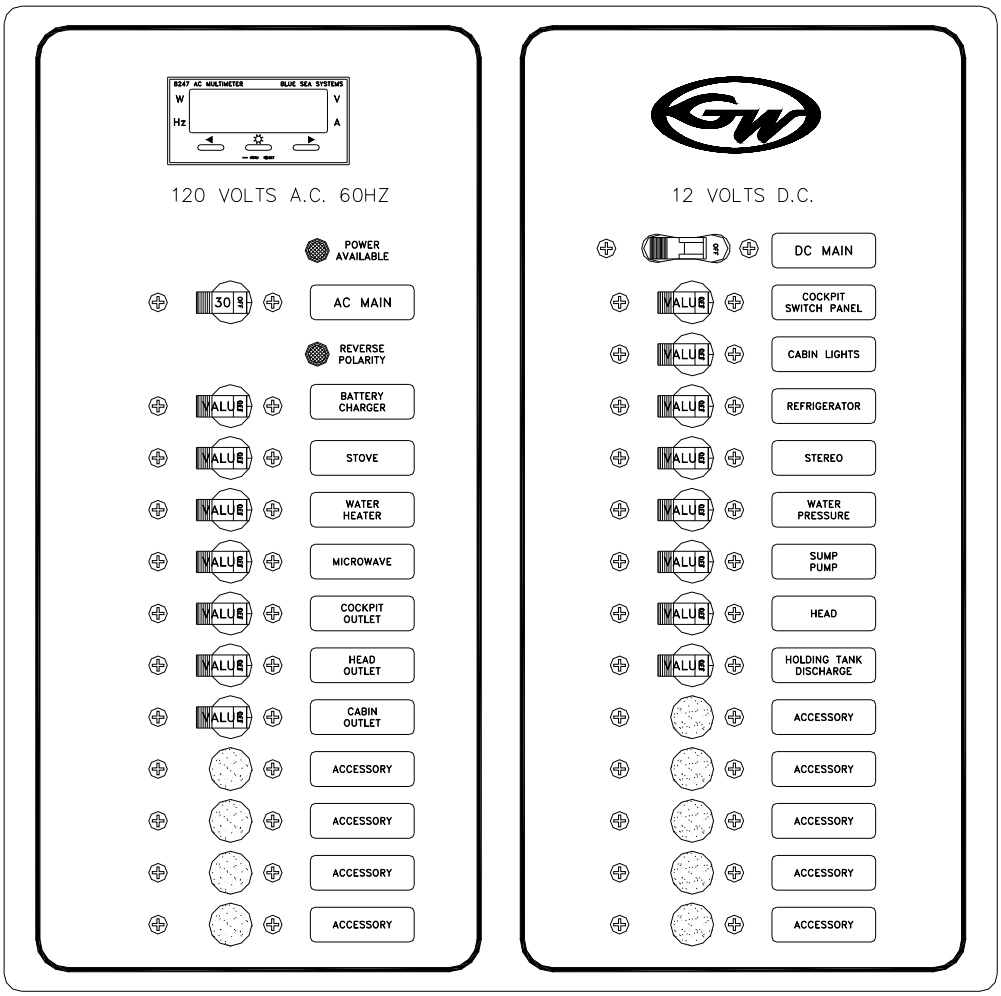

AC Powered Accessory Switches

The dockside power feature must be connected to the shore power. The circuit breaker located under the deckwing must be in the "on" position to allow these auxiliary switches to operate. See *"AC/DC Panel Wiring – One-Line Diagram" on page 8–35* and *"Dockside Wiring" on page 8–30* for wiring a schematic and layout.

- **Main Power Switch**

The main power switch must in the “on” position to distribute power to the other various accessory switches.

- **Battery Charger Switch**
  The battery charger has a a red light to indicate the battery bank is receiving charge and a green light to indicate the battery bank is ready.
- **Stove**
  Reference the manufacturer's Operation Manual for information on safe handling and proper procedures prior to using the stove.

⚠ WARNING
Understand the instructions and warnings before operating your stove.

- **Water Heater Switch**
  This switch activates the six gallon (22.7 L) water heater.

⚠ CAUTION
To avoid heating element failure, do not turn on the hot water heater unless it is filled with water.

- **Microwave**
  An outlet has been designated for microwave use only. This switch provides current to this outlet. Read instructions in the manufacturer's Operating Manual before using your microwave.
- **Outlet Switches**
  These switches provide power to the three electrical outlets. The head outlet and cockpit outlet are duplex ground fault receptacles and are equipped with water tight cover plates. The cabin outlet is also a duplex ground fault receptacle.
- **Air Conditioner (optional)**
  This switch operates the ***optional*** air conditioner. This system must be winterized if freezing temperatures are possible. Refer to the manufacturer's Owner’s Manual in your Owner’s Packet for detailed instructions on operation and maintenance.

Battery Charger

This accessory is located in the aft rigging compartment near the batteries. The optional generator must be running or the dockside power must be connected for the charger to work. To activate the charger, turn the AC panel breaker switch to the “on” position. The charger has a built-in isolator that senses the charging needs of all the batteries and distributes charge accordingly. At the point that all batteries are nearly fully charged, the charger will automatically reduce the current being sent to the batteries to a maintenance level. See the charger Operation Manual in your Owner’s Packet for further information.

Microwave

The dockside power must be connected or the optional generator must be operating for the microwave to function. Refer to the Microwave Operation and Maintenance manual in your Owner's Packet for specific instructions on the safe and proper use of the microwave.

Water Heater

The optional generator must be operating or the dockside power connected with the AC breaker switch on for the water heater to function. This accessory will provide hot water to the pressurized freshwater system. Follow the Water Heater Operation and Maintenance manual provided in the Owner's Packet for instructions and care of the water heater.

Stove

Located at the galley, the stove is a glass single element cook top which operates by AC current only. Therefore, the optional generator must be operating or the dockside power must be connected prior to use. When using your stove, release the four "pop-up" retainers to hold cooking containers in place. Please review the factory provided information in your Owner's Packet for instructions on safe and proper use of this unit.

DC POWERED ACCESSORIES

DC Powered Accessory Switches

- **Main Power Switch**
  The main power switch must be in the "on" position to operate the DC accessory switches.
- **Cockpit Switch Panel**
  This switch activates the accessory switches at the helm accessory panel.
- **Cabin Lights**
  This switch provides power for the dome and reading lights located in the cabin.
- **Stereo**
  This switch furnishes power to the stereo.
- **Water Pressure Switch**
  This switch powers the 32 gallon (121 L) pressurized freshwater system for the galley faucet, head faucet, cockpit showers, VacuFlush® head system, and windshield washer system.
- **Shower Sump Pump**
  The shower sump pump pumps water from the shower floor overboard. This unit is located in the rigging area under the aft berth. This pump can be reached through the lift out board under the center aft berth cushion.
- **Refrigerator**
  Refer to the manufacturer's Operating Manual in your "Owner's Manual Packet" for operation and maintenance instructions.
- **TV/DVD (optional)**
  This switch provides power to the optional flat screen TV and DVD player.
- **Head Switch**

This switch provides power to the vacuum pump integrated within the head system. Without engaging this switch, the head will not operate. It also activates the tank manager level monitor panel in the head area. See *"VacuFlush® Head System" on page 8–13* for information about the head system.

Livewell - Raw Water

To operate the livewell, open the seacock located in the aft bilge using the remote arm labeled livewell. The livewell pump is screwed directly into this seacock. The livewell switch at the helm should be in the "on" position. Place the livewell standpipe in the drain located at the bottom of the livewell. Screw it down until the black flange makes contact with the flange on the drain fitting. Water will enter through a plenum along the side of the livewell and be distributed through a series of holes arranged vertically along the plenum. The water will rise until it reaches the top overflow drain on the plenum at which point it will drain overboard. See *"Livewell/Washdown System Layout" on page 25* for a layout diagram.

NOTICE
If the livewell seacock is left open and the pump is not on, the boats forward motion through the water will gradually fill the box. To prevent this inadvertent filling, close the seacock when the livewell is not in use.

NOTICE
Under certain conditions, placing the outboard engine(s) in reverse will ventilate the water under the boat and create an air lock in the livewell pump. To prevent this situation from occurring, it is recommended the livewell be turned off prior to any high RPM or continuous reverse operation. If the livewell pump becomes air-locked, correct this situation by turning the pump off for 20 seconds.

Raw Water Washdown Operation

To operate the washdown, open the seacock with the washdown I.D. tag located in the forward bilge beneath the sole floor rigging lid. Depress the washdown switch on the accessory switch panel. This system will now be pressurized at the "raw water" washdown outlets, located port side at the aft and the bow. A hose with a spray nozzle attached may be used intermittently without turning the switch off in the same fashion as a home yard hose with a nozzle. The washdown pump has an internal pressurization switch that will maintain water pressure as needed until the switch is turned off at the switch panel. The pump is located in the forward starboard rigging compartment and may be accessed via the access panel in the aft storage area under the helm. See *"Livewell/Washdown System" on page 8–26* for a system diagram.

Battery Select Switch

The Express 305 is equipped with four batteries and two battery select switches. The batteries are grouped into two banks, each bank consisting of two batteries wired in parallel. One battery select switch is designated for each engine, and the accessories operate from the same

switch as the starboard engine. See *"Battery Wiring With Select Switches" on page 8–34* for a battery wiring diagram.

An outboard engine should be connected to each battery select switch. Either engine may be started with either battery bank by selecting position "1" or position "2" on the select switches. In normal use select position "1" on the starboard switch and position "2" on the port switch so that both battery banks will charge simultaneously with the engines running.

⚠ CAUTION

Never turn the battery select switch to the "off" position with an engine (including generators) running as this could damage the engine charging system or the control panel.

Stereo

The stereo is a marine AM/FM receiver with an integrated iPod®/iPhone dock and a Bluetooth® adapter. A Sirius satellite radio tuner and antenna may be installed in lieu of the Bluetooth® adapter upon request. It is located inside the cabin with speakers in the forward cabin area, the hardtop and the cockpit. There is an amplifier that operates two of the speakers and is located behind the stereo. The unit can be remotely operated with the touch pad mounted at the helm station. Refer to the stereo's Operation and Maintenance manual in your Owner's Packet for specific instructions on using this unit. See *"Stereo System Layout" on page 8–24* for a diagram.

Trim Tabs

Trim tabs are electrically and hydraulically operated. The trim tab system includes a hydraulic pump, a switch with an integrated indicator, and an auto-retract feature. The switch controls the pump which lowers and raises the trim tabs. The indicator keeps you constantly aware of the trim tab's position. The auto-retract feature automatically raises the tabs every time the ignition switch is turned off.

Trim tabs are used to regulate the attitude of the boat while moving and will aid in trimming the boat fore and aft for a smoother ride. Trim tabs can improve the ride of your boat by adjusting where the water is hitting the keel line. In a slight chop, the waves may be hitting the keel of your boat around the helm area causing an uncomfortable ride. By adjusting the trim tabs and lowering the bow, the waves will hit the keel at a more forward point and soften the ride. Experimenting with trim tabs in various sea conditions will help you determine the best positions for your boat under different load conditions.

Trim tabs are also useful in correcting a port or starboard running list. If the boat is listing to the port side, press the starboard trim tab switch toward “bow down”. Press the port trim tab switch toward “bow down” to correct a starboard list. This will tend to lower the bow by pulling the higher side to a level position. If your bow is already in a low position and your tabs are down, you may correct a listing condition by pressing the trim tab switch toward “bow up”. This will cause the low side to rise and level the boat. The running angle will also gradually improve.

Trim tabs in the extreme “bow up” positions will have no effect on the boat's ride. Trim tabs in the extreme “bow down” position will cause the boat to come on plane with minimum bow rise. Unless you are operating at low speeds or with considerable cockpit weight you will likely want to raise the tabs slightly when underway to avoid “plowing” water. With the tabs in the “bow down” position, you will be able to maintain a plane at the least possible RPMs.

Trim Tab Pump Location

The trim tab pump is located in the rigging area behind the port wall of the aft berth. The hydraulic fluid level should be checked on a seasonal basis.

VacuFlush® Head System

The VacuFlush® Head consists of a vitreous china bowl, vacuum pump with tank, and a holding tank. To operate the head, the head and water press. switches on the DC panel must be in the “on” position. This provides power to the vacuum pump, and pressurizes the freshwater system. Since this unit uses freshwater, it is not necessary to open a seacock prior to use. Instructions on the operation of your VacuFlush® head are as follows:

1. Verify that the switches on the DC panel are in the “on” position.
2. To add water prior to flushing, raise the flush lever on the bowl until the desired level is reached.
3. To flush, depress the flush lever sharply until contents clear the bowl. A sharp popping noise is normal when the vacuum seal is broken and flushing begins. Be sure to hold the lever down for 3 seconds.

NOTICE
Do not dispose of sanitary napkins or other non dissolving items in the toilet. Also, do not attempt to flush facial tissue, paper towels, or large quantities of toilet paper.

Located on the aft head wall is a monitor which displays the fill level of the holding tank When the tank is filled, it can be discharged overboard or emptied through the deck pump-out fitting. Following are instructions on both operations:

Overboard Discharge

1. Open the discharge seacock located under the aft berth subfloor with the disch. I.D. tag. This seacock must be open prior to discharge to prevent damage to the discharge pump. To access, take out the center cushion and remove the compartment cover board.
2. Supply power to the pump at the DC panel using the switch labeled Holding Tank Discharge.
3. Engage the pump using the key switch in the tank manager panel on the aft head wall. Turn the switch to the “manual” position. The discharge pump will run until the tank manager panel indicates the tank is empty.

4. Close the discharge seacock when the tank is empty.

⚠ CAUTION

Overboard discharge seacock must be sealed and secured in the "closed" position in accordance with the laws in your boating area.

Deck Pump-out

1. Remove the cap from the deck pump-out fitting located in the starboard walkaround.
2. Connect a vacuum hose from a pump-out station to the deck fitting and run until the tank is empty. Replace the cap on the deck pump-out fitting.

See *"VacuFlush® Head Layout" on page 8–27* for a layout diagram.

Operation Of Optional Features

AIR CONDITIONER

The control panel for the air conditioner is located in the galley cabinet above the stereo. There are two vents in the cabin, one near the cabin entry way above the microwave and the other on the forward vertical wall of the galley cabinet at the V-berth. The generator or dockside power must be operating in order to use the air conditioner. Also, the shower sump pump should be switched on to remove any condensation. For detailed instructions, refer to the Operation and Maintenance Manual provided in your Owner's Packet.

NOTICE

If your boat is removed from the water, leaving the seacock open will drain the water in the air conditioning system. This may cause an air lock in the air conditioner water pump in subsequent operation. To prohibit this drainage, simply close the air conditioner seacock. To winterize, leave the seacock open so the water can drain and then remove any remaining water by blowing pressurized air through the system. See the Operation and Maintenance Manual included in your Owner's Packet for additional winterizing information.

⚠ CAUTION

To avoid restriction due to debris in the raw water intake strainer, turn off the air conditioner and close the intake seacock while docking or operating in shallow water.

BOW THRUSTER

The optional bow thruster aids in maneuvering your boat. The outboard engines can control the direction of the stern while the bow thruster drives the bow. Use the joystick control located at the helm to control the thruster. The emergency shut-off switch provides a simple method to quickly disconnect power from the thruster motor. Depress this button to disengage the thruster in the event of an emergency. Reference *"Bow Thruster Layout" on page 8–22* for a layout diagram.

GENERATOR

The generator option enables you to use AC accessories without being attached to shore power. A Fischer Panda™ model 4200, capable of producing 4200 peak watts (34 amps) and a constant 3800 watts (31.6 amps) is installed with the generator option. A separate 12 gallon (45.4 L) diesel tank located in the aft rigging area supplies fuel for the generator. The diesel fuel level may be monitored using the gauge located near the generator control panel.

The generator provides sufficient power to operate several accessories at the same time. Listed below are the amperage requirements for all standard and optional AC accessories. However, these are maximum values and the full amount will not necessarily be on all at once. Both generators are capable of handling momentary peaks above their rated capacities. These peaks are normally related to the start-up of each accessory. In addition to the factory installed appliances, you should know the amperage requirements of any household objects you bring on board.

• **Electric Stove**	**10 Amps**	**(5.0) 50Hz**	**Maximum Amps**
• **Microwave**	**7.1 Amps**	**(3.6) 50Hz**	**Maximum Amps**
• **Hot Water Heater**	**12.5 Amps**	**(6.3) 50Hz**	**Maximum Amps**
• **Air Conditioner & Pump**	**8.4 Amps**	**(4.2) 50Hz**	**Running Amps**
• **Cockpit Coolers**	**6.6 Amps**	**(3.3) 50Hz**	**Running Amps**
• **Battery Charger**	**6.3 Amps**	**(3.2) 50Hz**	**Maximum Amps**

⚠ CAUTION

Do not leave the generator seacock open while the boat is in motion and the generator is off. You can use the generator while the boat is moving. However, when the generator is shut down the intake seacock should be closed immediately. If the seacock remains open, excessive seawater may be forced into the generator cooling system causing water to back up into the exhaust manifold.

Carbon Monoxide Detector

A carbon monoxide detector is included with your generator package. This monitor serves as a warning system for exposure to poisonous carbon monoxide fumes. Carbon monoxide is a colorless odorless gas produced in the exhaust of combustion engines. It can accumulate in amounts that may be hazardous or fatal. This accumulation may occur very quickly in a boat with a defective exhaust or one in which the exhaust is re-entering the boat due to wind currents, low pressure areas in the cabin, or other means of air movement. A CO monitor provides an extra measure of safety, but does not replace the need to regularly check the entire generator exhaust system including the exhaust manifold, hose and muffler condition, hose connection joint, etc. For proper operation and maintenance, refer to the literature provided by the manufacturer in the Owner’s Packet.

⚠ WARNING

End-of-Life (EOL)
The carbon monoxide detector is equipped with a 5 year EOL timer, which operates continuously and independently from a lithium battery. When the timer has run for 4 years and 11 months from the date of manufacture, the unit will signal the first EOL alarm: The green LED will turn off, the red LED will turn on and the alarm will beep every 30 seconds.

To temporarily reset the device to normal operation after the EOL alarm occurs, press and hold the test/silence button until both lights come on. It will be reset for 72 hours and this process can be repeated for 30 days. After 30 days the unit will continuously signal EOL and must be replaced, as it will no longer detect CO.

AC Transfer Switch

If your Express 305 is equipped with a generator, there will be a transfer switch located in the cabin beneath the AC/DC panel. This switch permits you to operate your AC accessories by either shore power or generator. This switch prevents the operation of the shore power and the generator simultaneously.

Blower

A blower is included with the generator option. The blower provides ventilation to the engine compartment and should run at least 4 minutes before starting the generator. Using the blower does not take the place of checking the engine compartment by sight and smell for gasoline vapors. The blower is located in the aft rigging compartment beside the batteries.

Generator Start/Stop Switch

The generator start/stop switch is located in the cabin beneath the AC/DC panel. This switch permits you to start and stop your optional generator from the cabin.

OUTRIGGERS

The optional outriggers spread the fishing lines being trolled from your boat and decrease the chance of entanglement.

- **Advantages**

  Advantages of outriggers include offering bait throughout a larger area behind the boat, placing bait out of the wake zone, automatic drop back following strikes (which allows for fish to completely accept bait), and a reduction in unnecessary twisting action characteristic of artificial bait.

- **Instructions**

  For installation and use, reference the sheet included in your Owner’s Packet.

- **Care And Maintenance**

  - Outriggers should be washed with freshwater, mild soap, and a soft cloth. Never use abrasive cleaners on outriggers.

- A periodic waxing is suggested if your outriggers are exposed to salt water. The wax will provide a protective coating and seal the pores of the metal. A non-abrasive high quality marine or automotive wax is recommended. Before storage, clean and wax the outriggers.
- During assembly, grease all threads, bolts, and tubes where one section is inserted into another. Disassemble and regrease all applicable surfaces on an annual basis.

POWER ASSIST HYDRAULIC STEERING

The engine ignition switches must be on for this system to function. The power assist hydraulic pump is activated simply by turning the steering wheel. The hydraulic pump senses the motion of the hydraulic fluid from the helm and pumps fluid in the cylinders at the engine accordingly. The power assist pump is installed in the starboard aft berth rigging area. Over-current protection is provided by a 50A fuse located on the positive terminal of battery bank #1. This system is compatible with multiple steering stations and the use of an autopilot. Refer to the owner's manual in your owner's packet for more information.

SIRIUS SATELLITE RADIO

The Sirius satellite radio includes the Sirius satellite tuner and antenna which provides access to many channels of digital entertainment. The antenna is installed on the forward bow area away from any structure that may cause signal interference. The tuner is installed below the galley counter behind the refrigerator. The tuner is controlled by the Sirius ready stereo installed on your boat.

You may activate your subscription to Sirius online at siriusradio.com or by calling toll-free 1-888-539-SIRIUS. If you choose to call, a Sirius operator will walk you through the initial setup process. You will need the ESN number for your tuner, a major credit card, your boat in a location where the antenna is not blocked from receiving signal, and the Sirius tuner tuned to channel 184. You will find the ESN number attached to the warranty card for the tuner included in the owner's packet. You may also obtain this number using your Sirius ready stereo by following a few simple steps:

1. Press the antennae button repeatedly until "SIRIUS XM" appears.
2. Scroll until "Channel 1" appears.
3. Write the number down and exit screen.

For more information, refer to the tuner's owner's manual and quick start guide included in your owner's packet.

TV/DVD

The television is a 15" (38 cm) flat screen LCD unit with speakers across the bottom. It is located in a separate TV cabinet in the forward vee berth. An A/B switch located below the TV is used to change between broadcast antenna and dockside cable reception. When the switch is set to A, the TV receives a signal from the broadcast antenna. Set the switch to B when connected to dockside cable. The DVD/CD is a separate unit located in the galley cabinet below the stereo. Both receive power from the AC inverter located behind the storage cabinet beneath the DVD player. An auxiliary audio/video input panel is also part of the TV system. This panel allows for external devices such as gaming systems to be connected to the TV using standard RCA cables.

Access Plate And Rigging Tube Location

#	Description	
A	3" x 72"	(1.8 m)
B	3" x 36"	(91 cm)
C	2" x 72"	(1.8 m)
D	2" x 36"	(91 cm)
E	2" x 60"	(1.5 m)
F	1 1/4" x 108"	(2.7 m)
G	1 1/4" x 44"	(1.1 m)

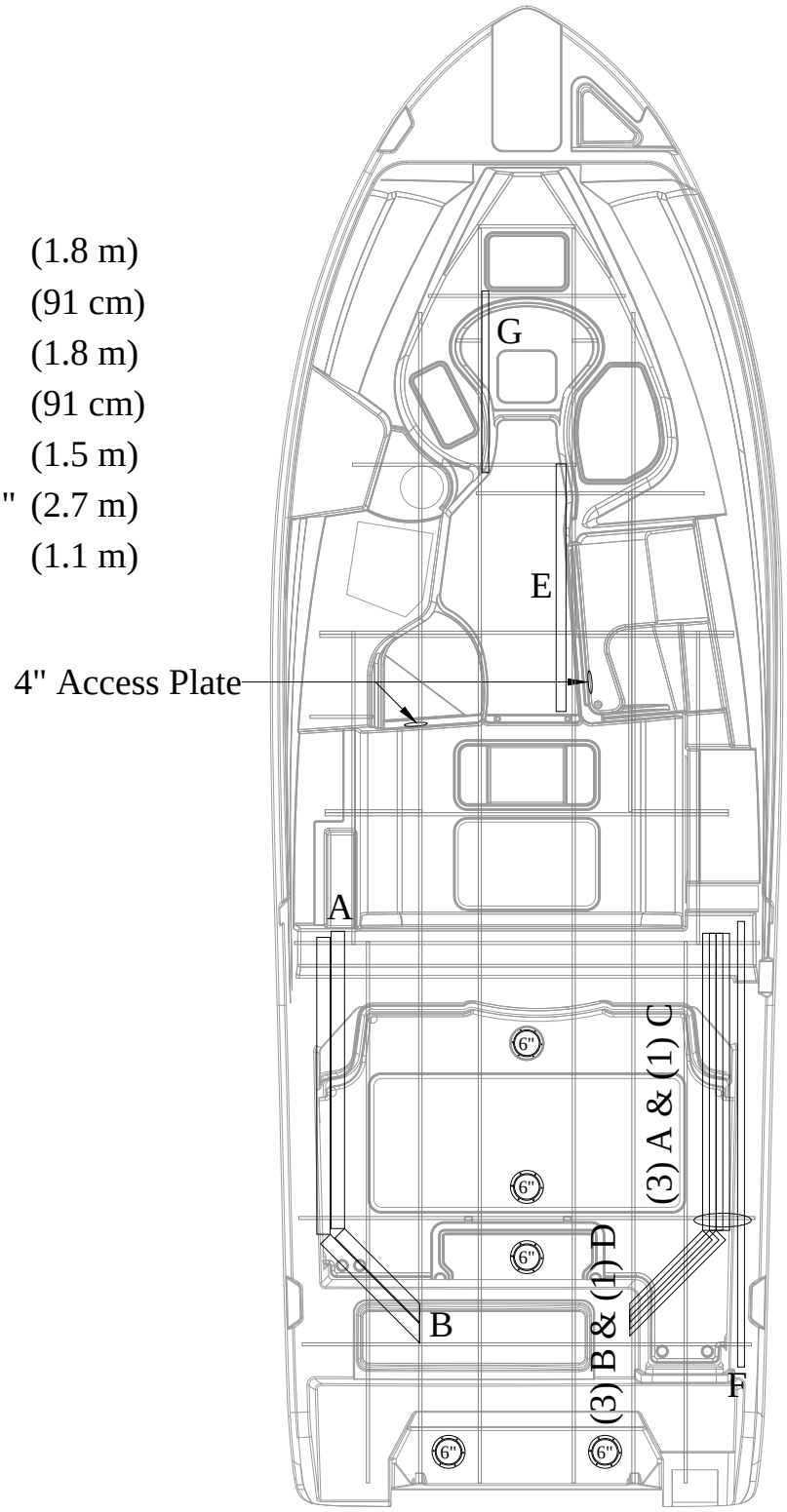

Fuel System

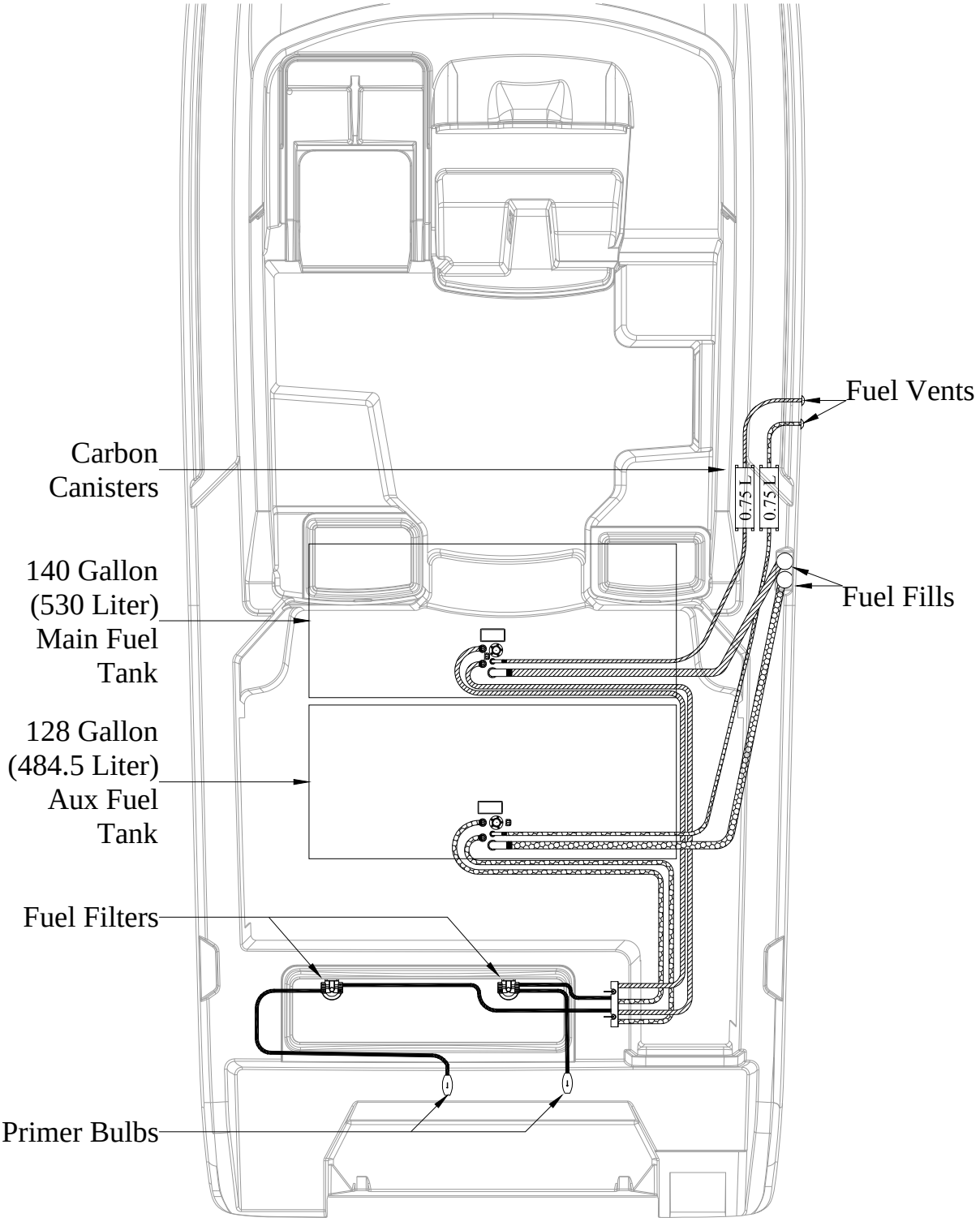
Fuel Vents
Carbon Canisters
0.75 L
0.75 L
140 Gallon (530 Liter) Main Fuel Tank
Fuel Fills
128 Gallon (484.5 Liter) Aux Fuel Tank
Fuel Filters
Primer Bulbs

Air Conditioning Layout

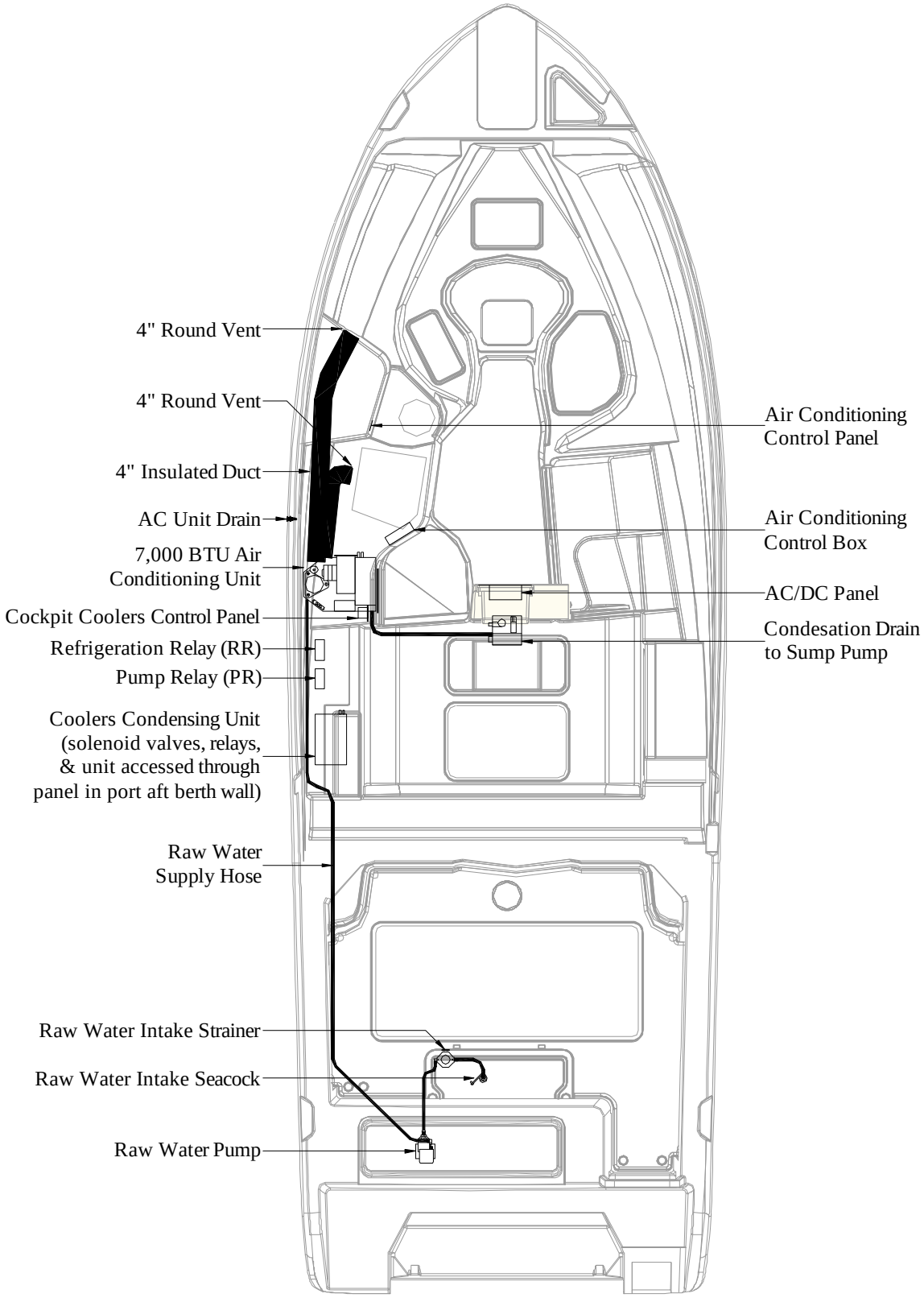

Diesel Generator Layout

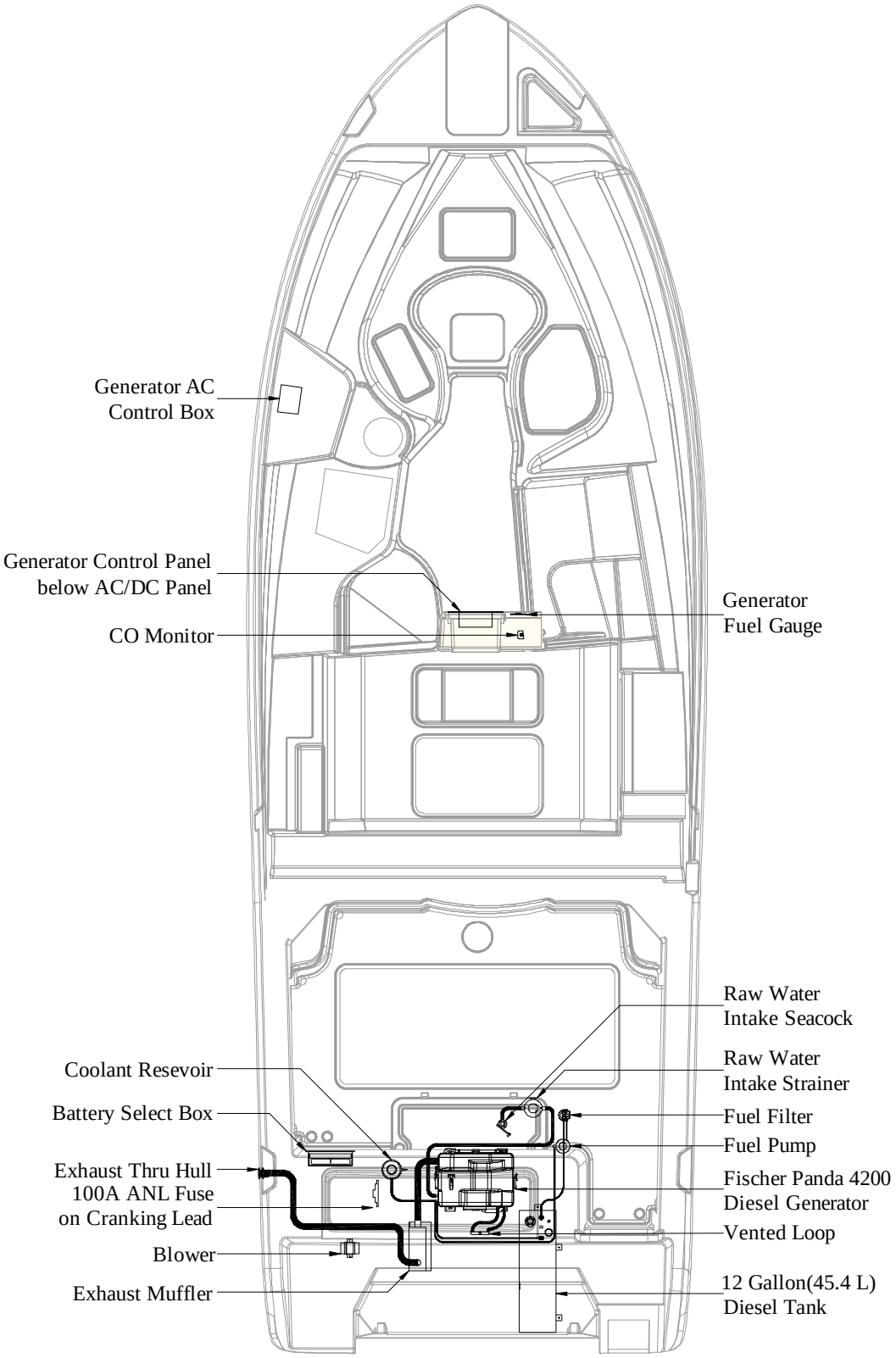

Bow Thruster Layout

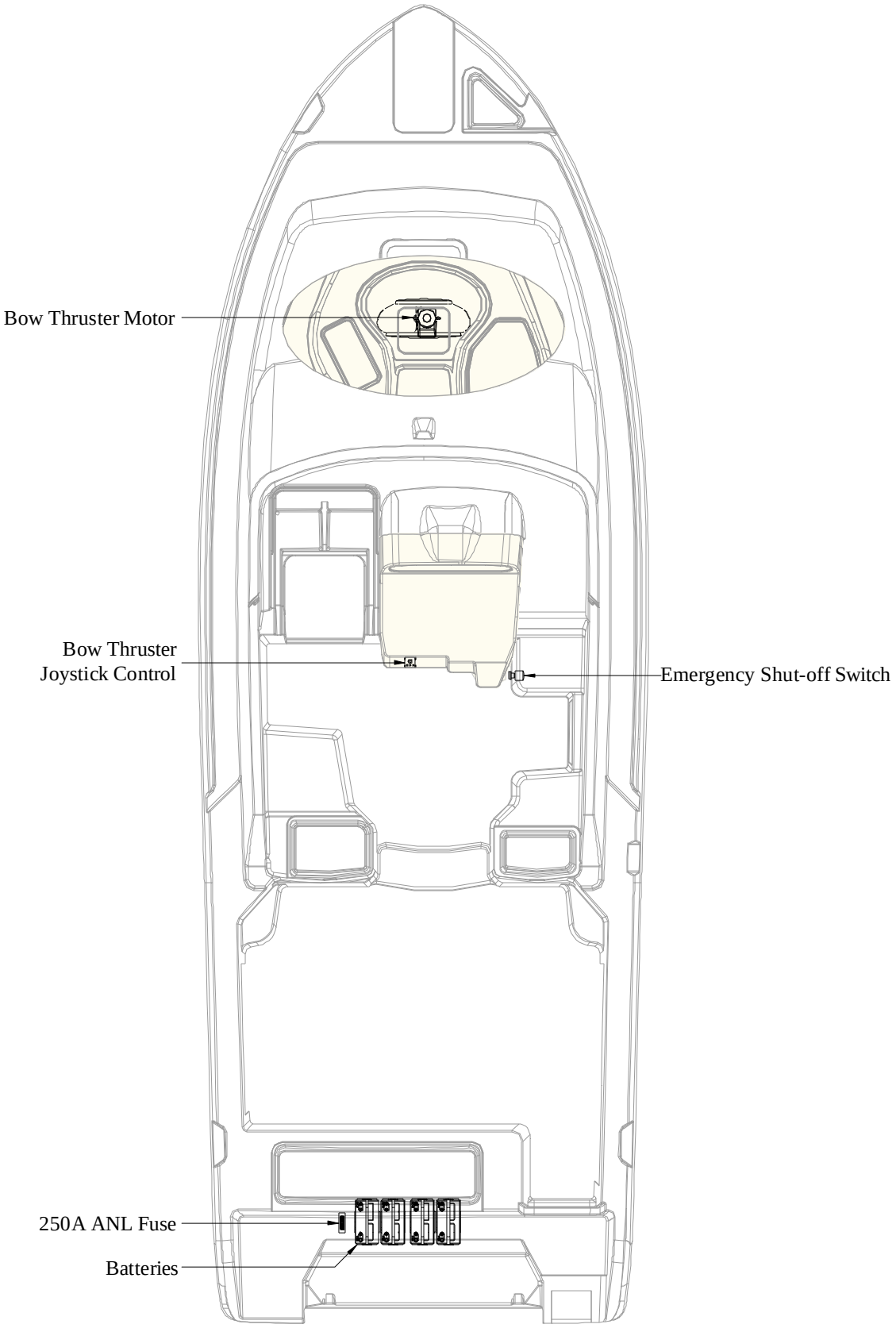

Labels And Location

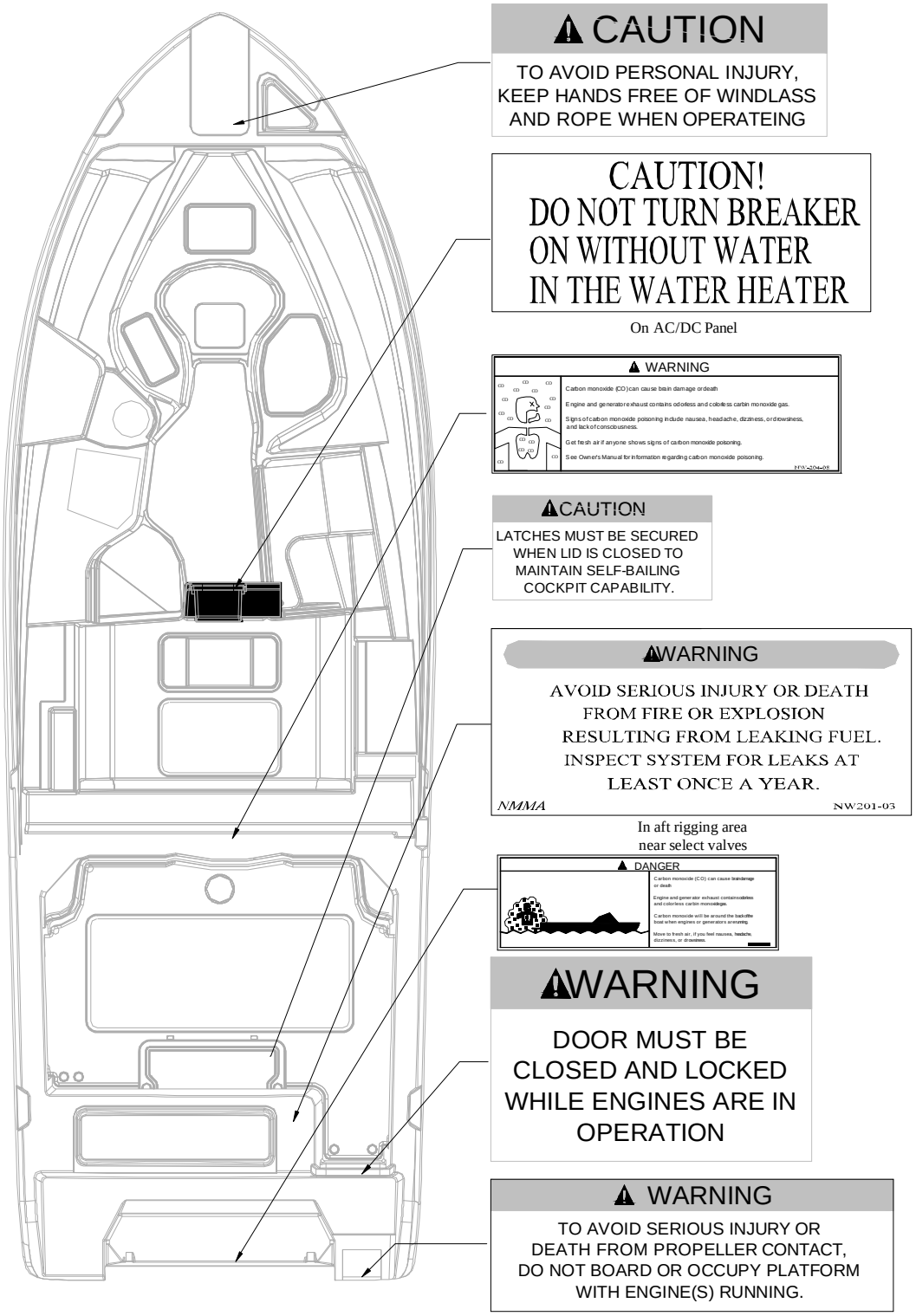

Stereo System Layout

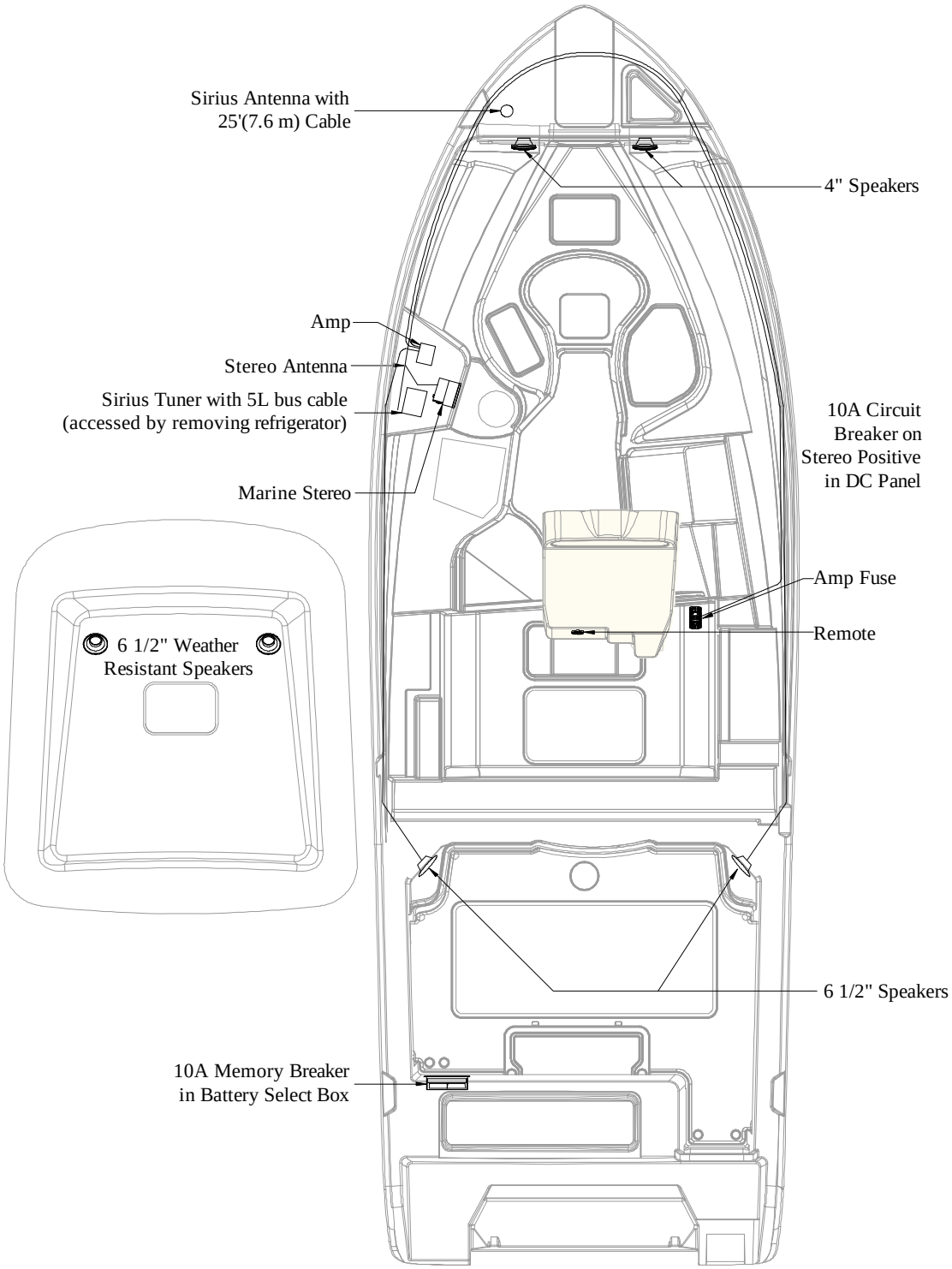

Livewell/Washdown System Layout

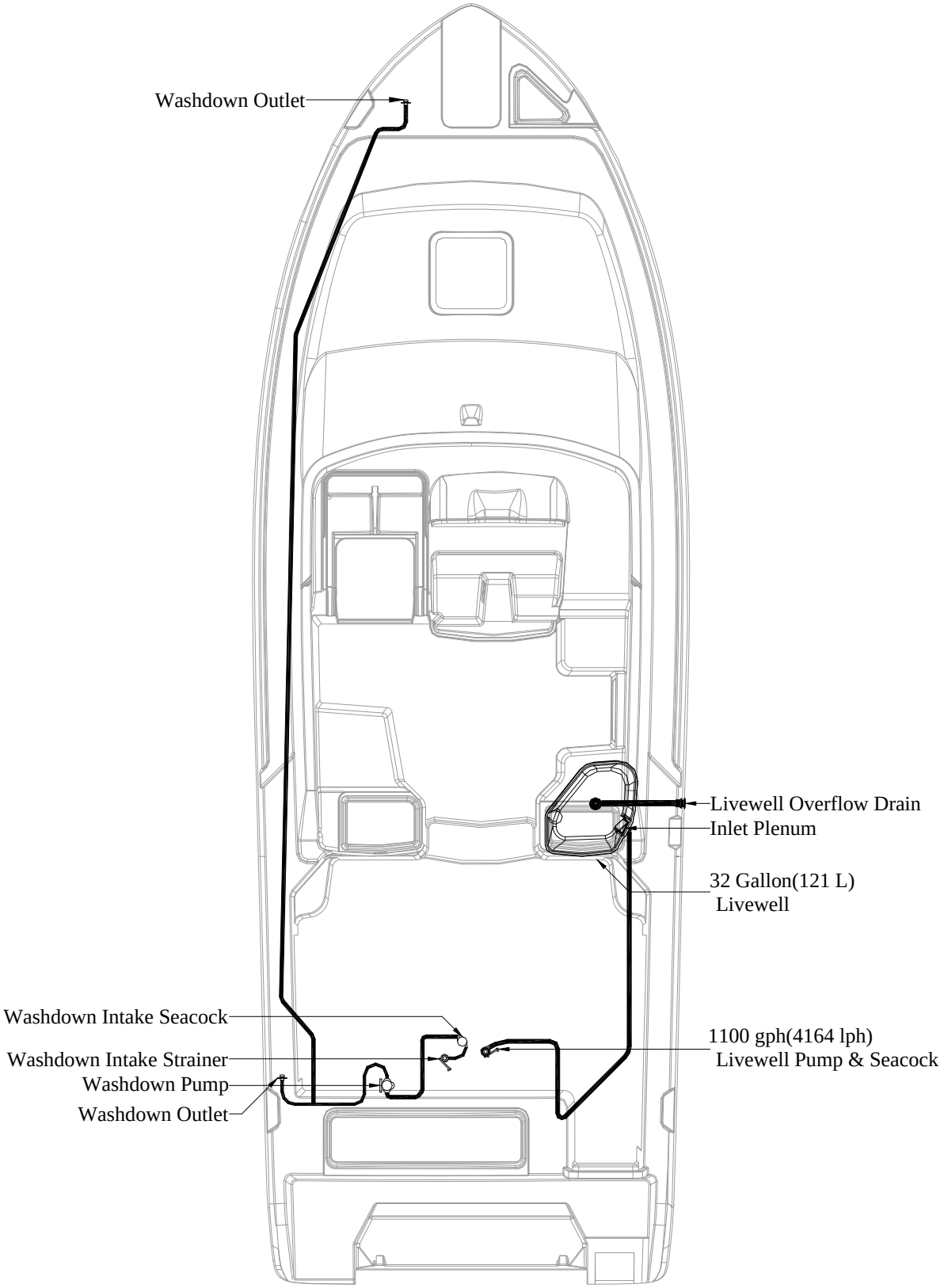

Livewell/Washdown System

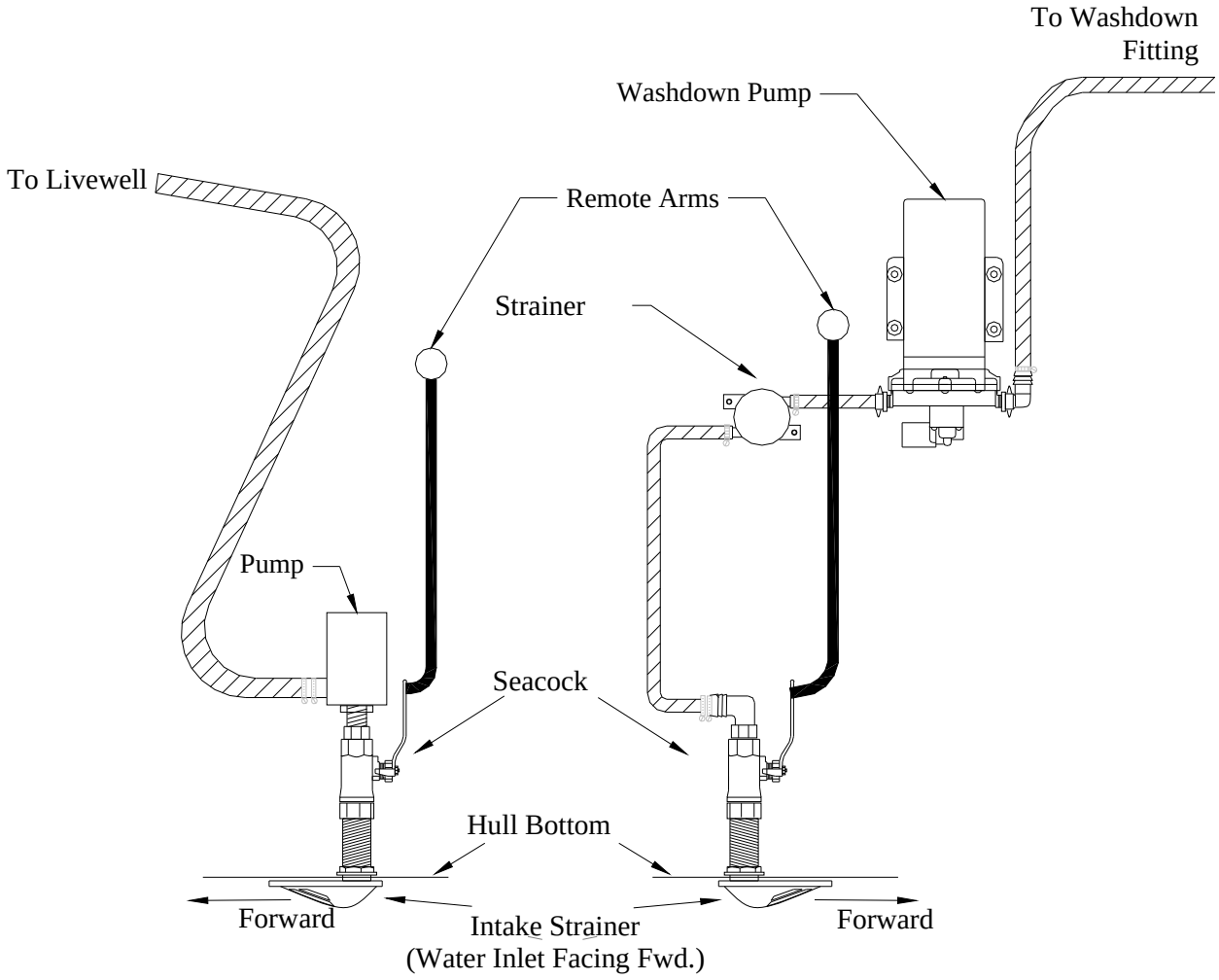

VacuFlush® Head Layout

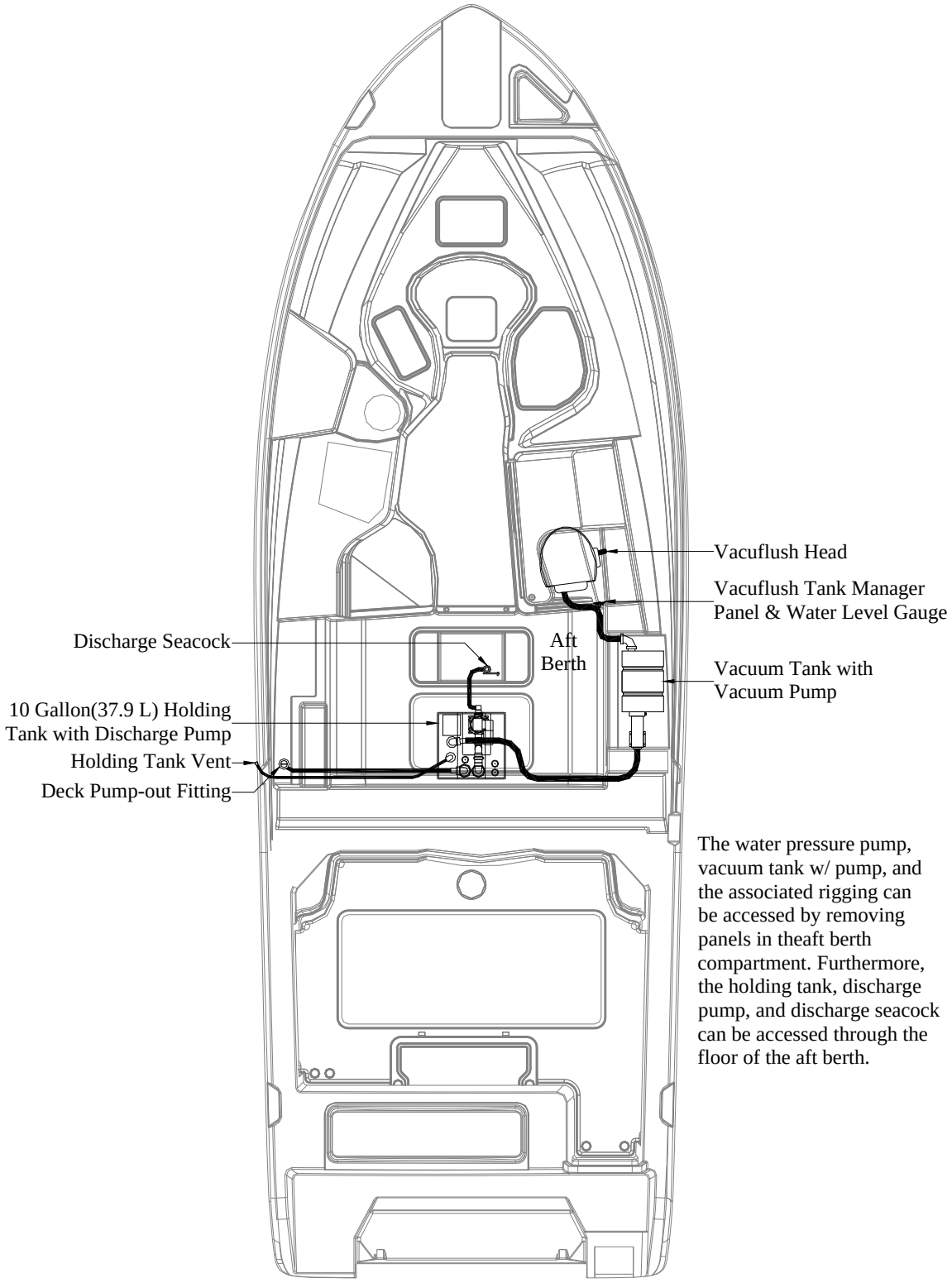

The water pressure pump, vacuum tank w/ pump, and the associated rigging can be accessed by removing panels in theaft berth compartment. Furthermore, the holding tank, discharge pump, and discharge seacock can be accessed through the floor of the aft berth.

Pressurized Freshwater System

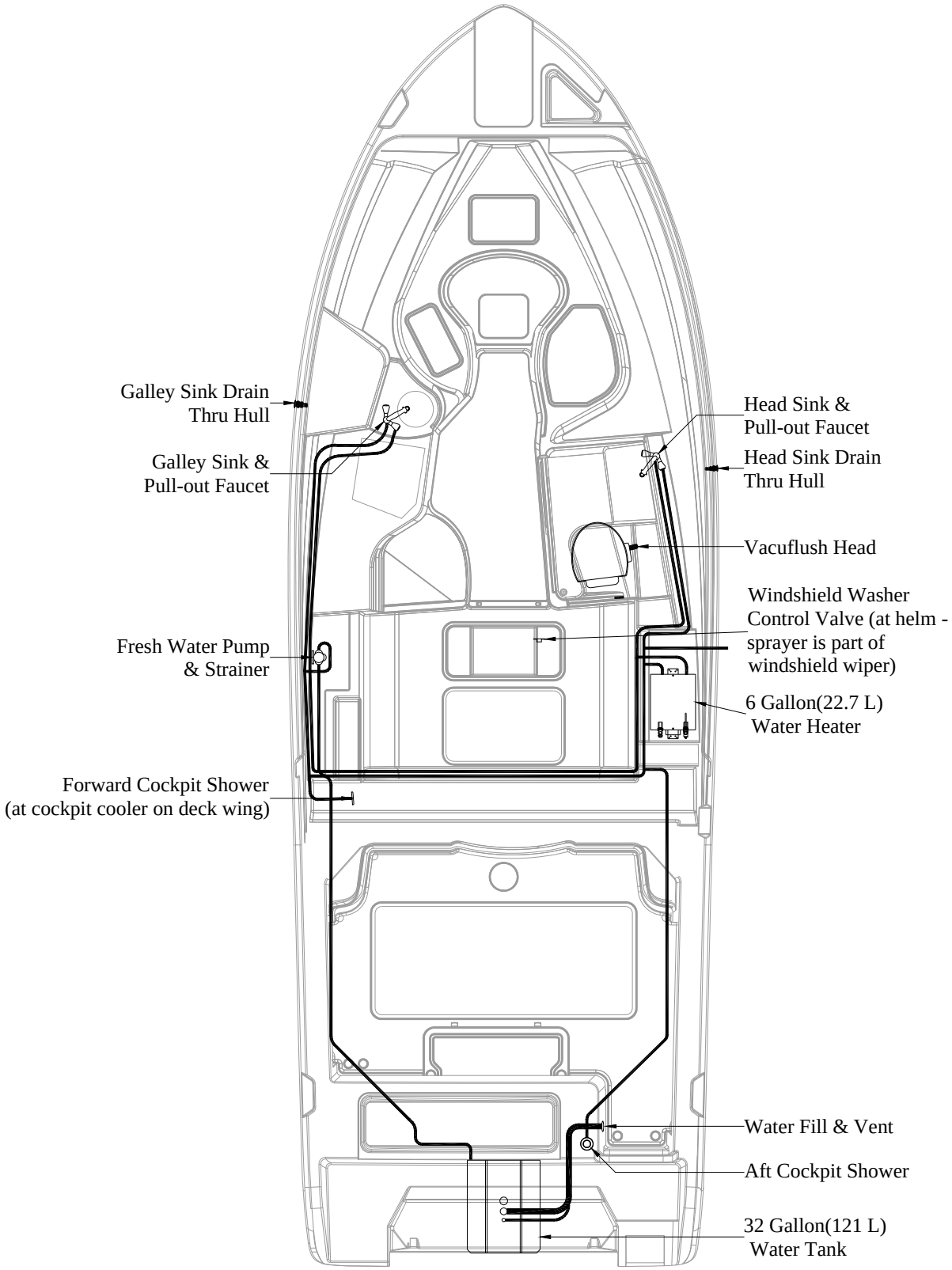

Thru Hull Detail

#	Description
A	Galley Sink Drain
B	A/C
C	Fwd Bilge
D	Shower Sump
E	Head Vent
F	Port Cooler Box Drain
G	Gen Exhaust (Diesel)
H	Aft Bilge
I	Aft Fishbox Drain
J	Scupper Drains
K	Livewell Drain/Overflow
L	Head Sink Drain

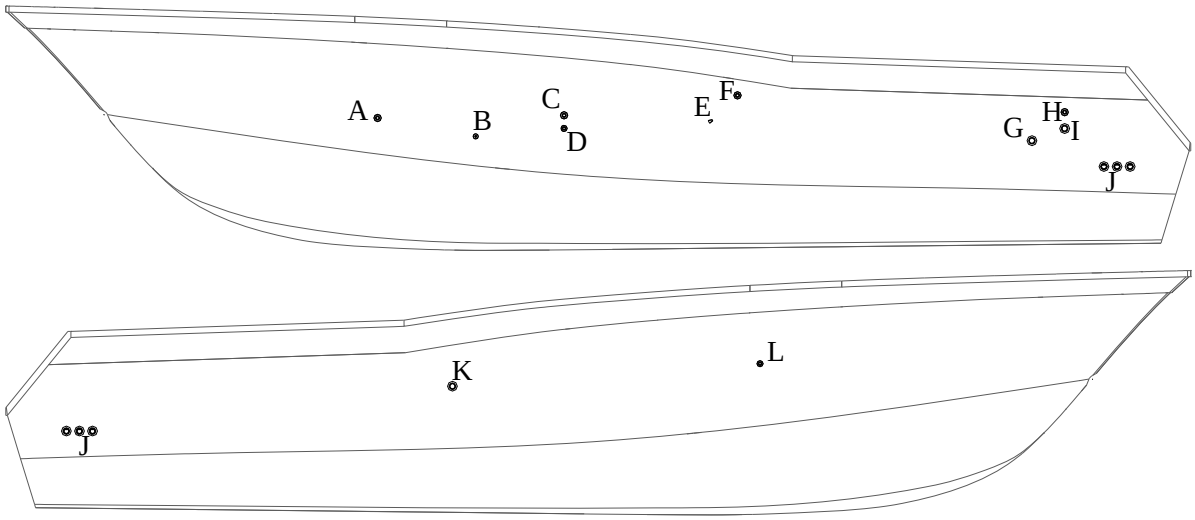

Dockside Wiring

Wire Sizes:
Main Shore Inlet: 10 AWG/3
Microwave: 12 AWG/3
Battery Charger: 14 AWG/3
Water Heater: 12 AWG/3
Outlets: 14 AWG/3
Stove: 12 AWG/3
Air Conditioner: 10 AWG/3
Generator Main: 10 AWG/3

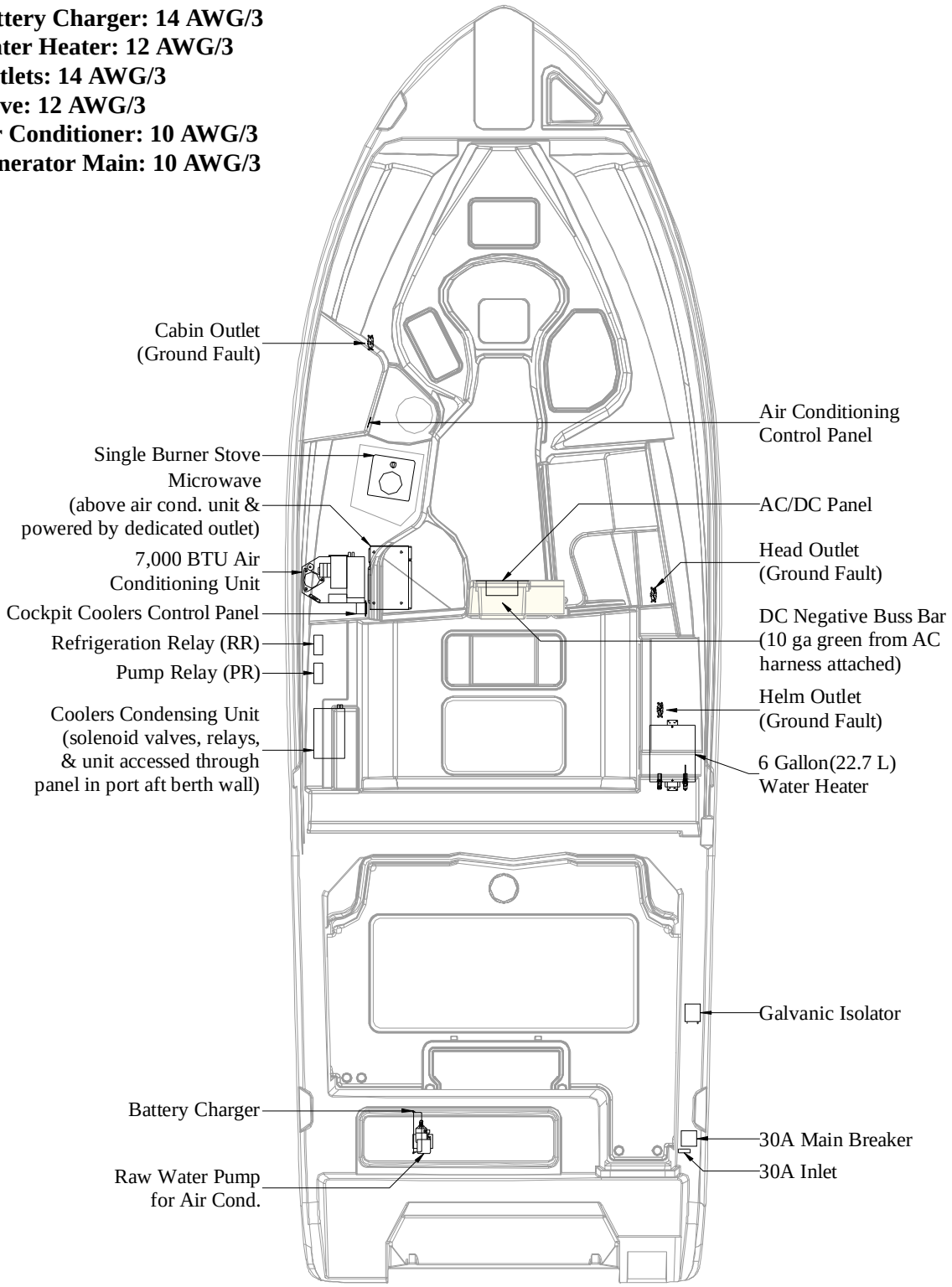

Accessory Wiring (1 of 2)

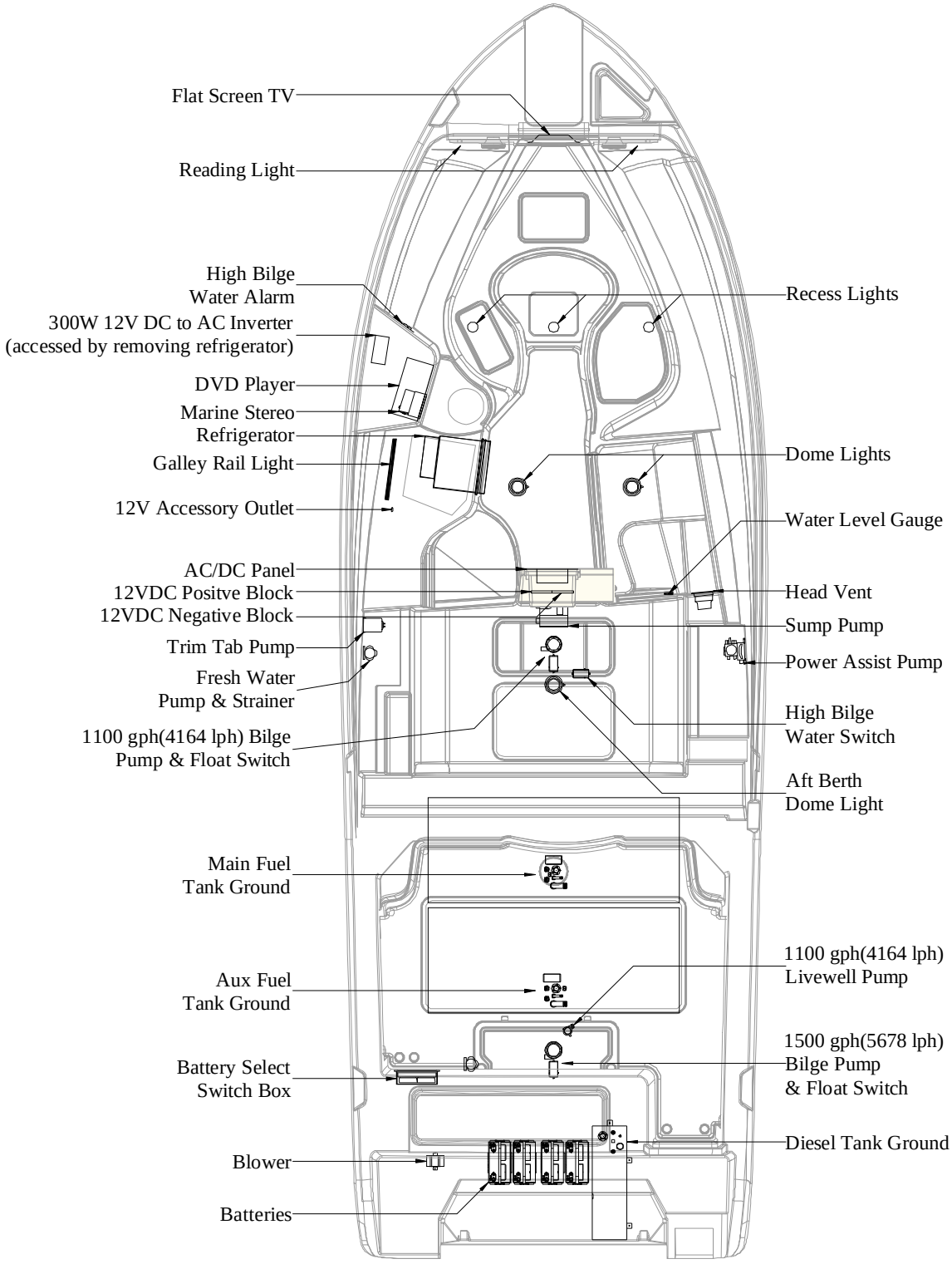

Accessory Wiring (2 of 2)

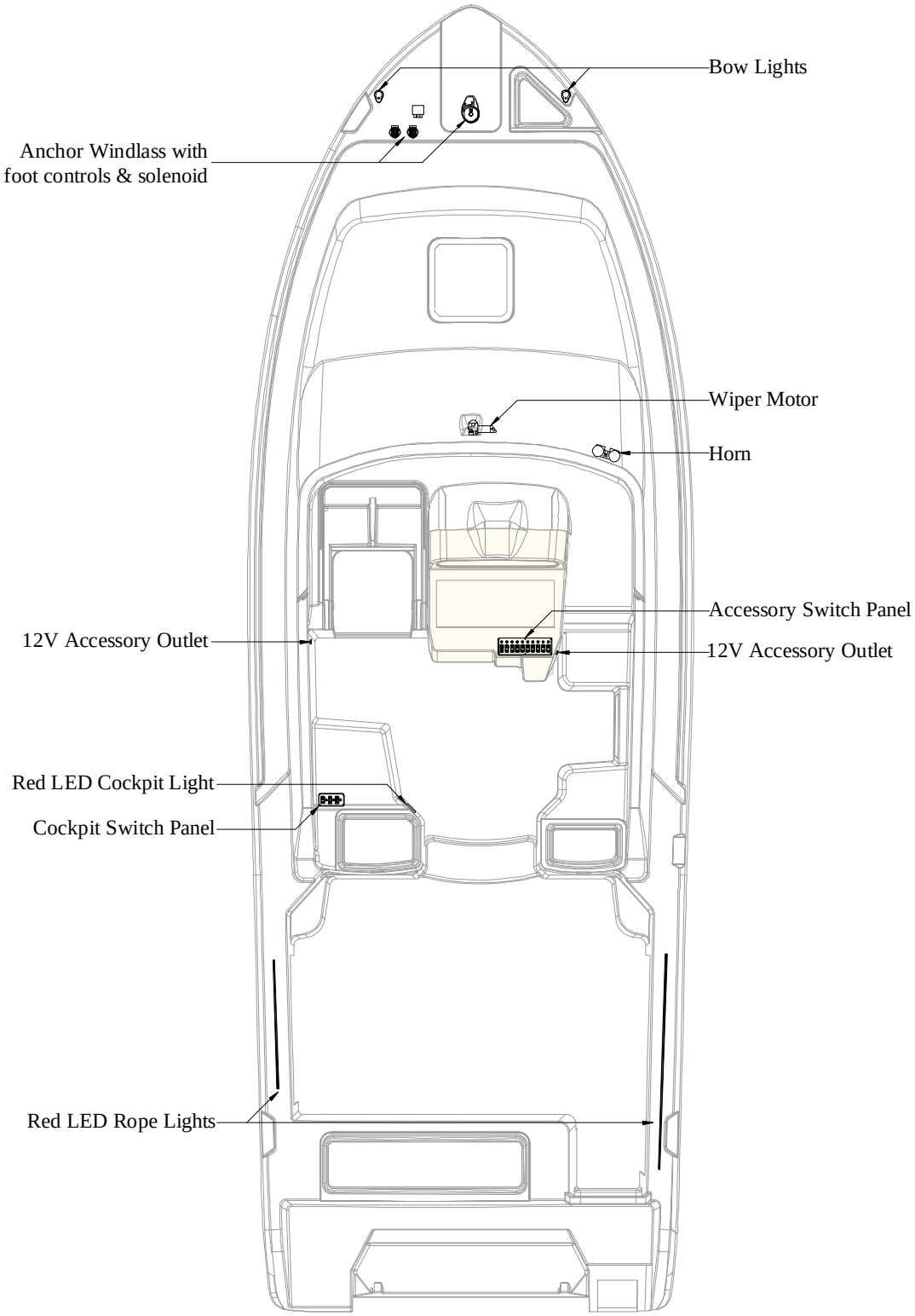

Hardtop Wiring

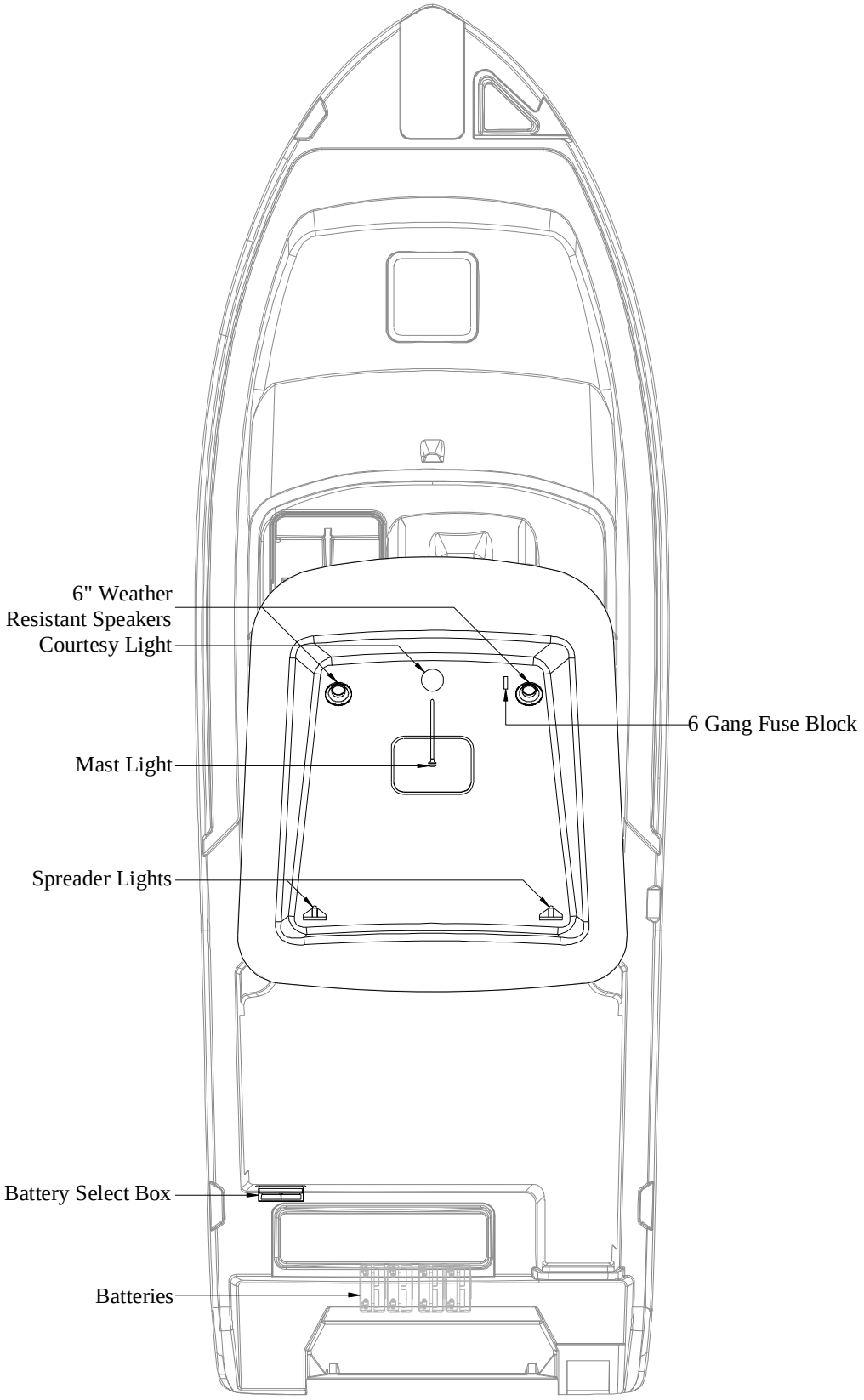

Battery Wiring With Select Switches

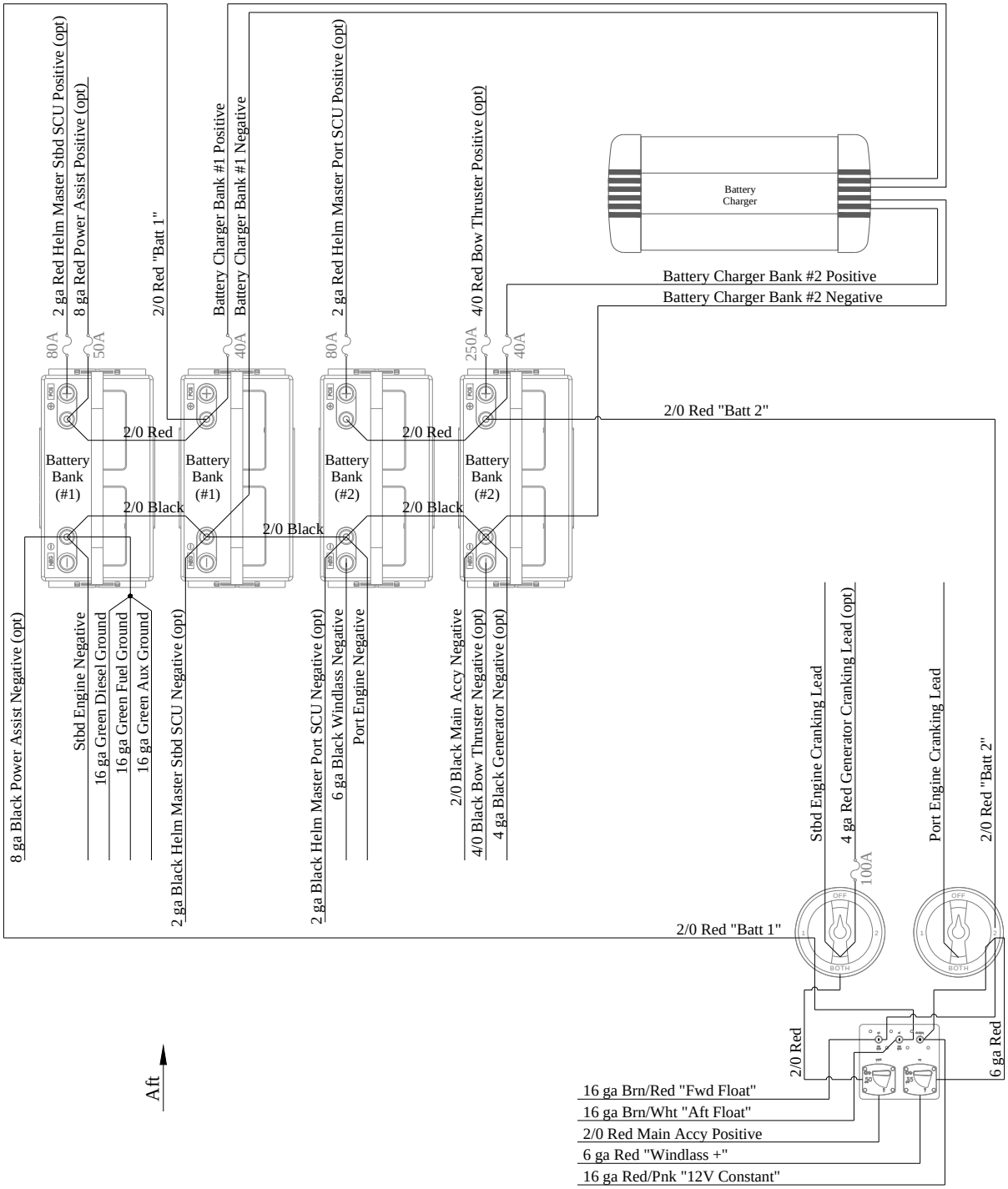

AC/DC Panel Wiring – One-Line Diagram

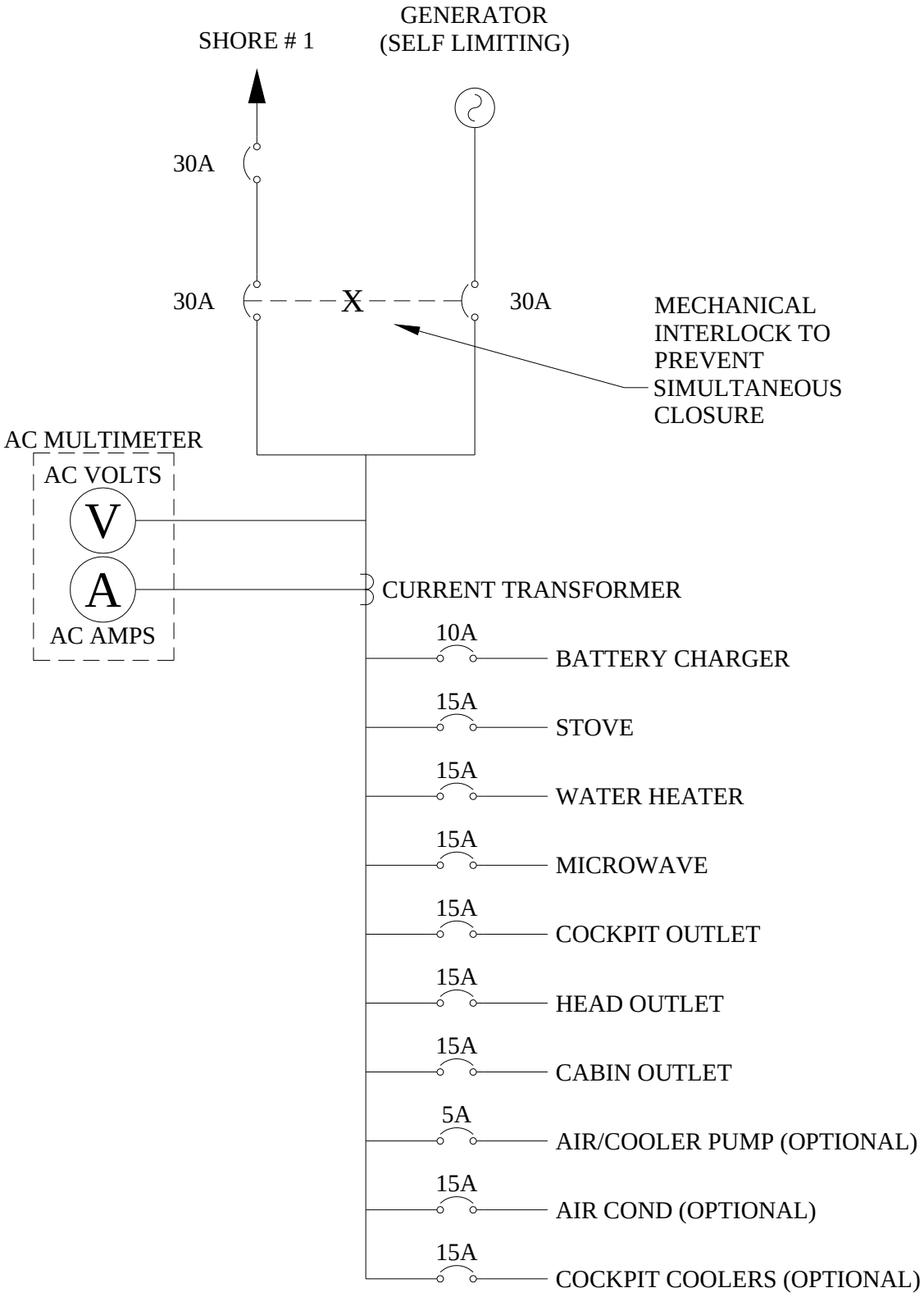

12 Volt DC Distribution Diagram

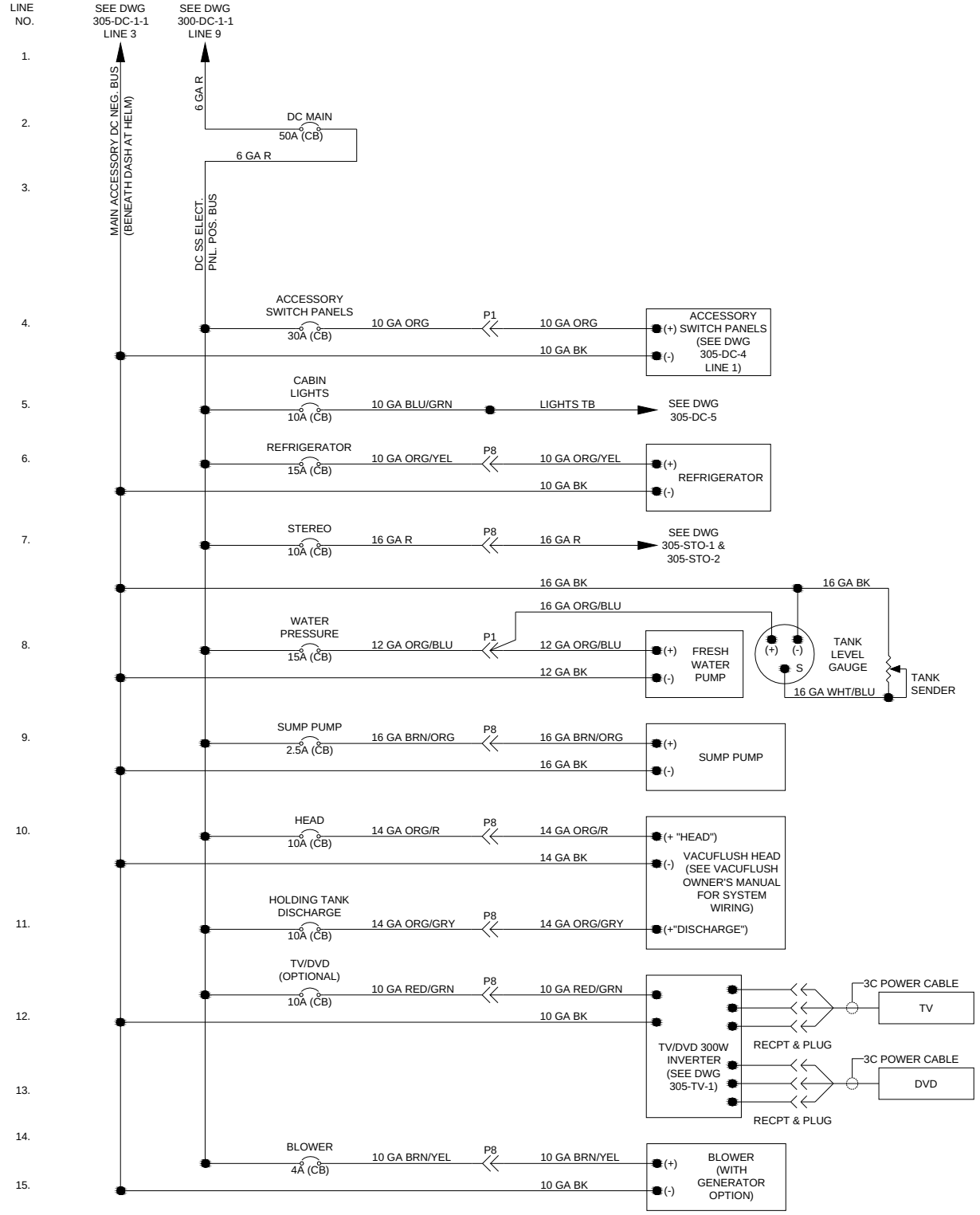

NOTES:

1) SEE LAYOUT DRAWINGS FOR LOCATIONS OF COMPONENTS

305-DC-2

12 Volt DC Cockpit Switch Panel Diagram

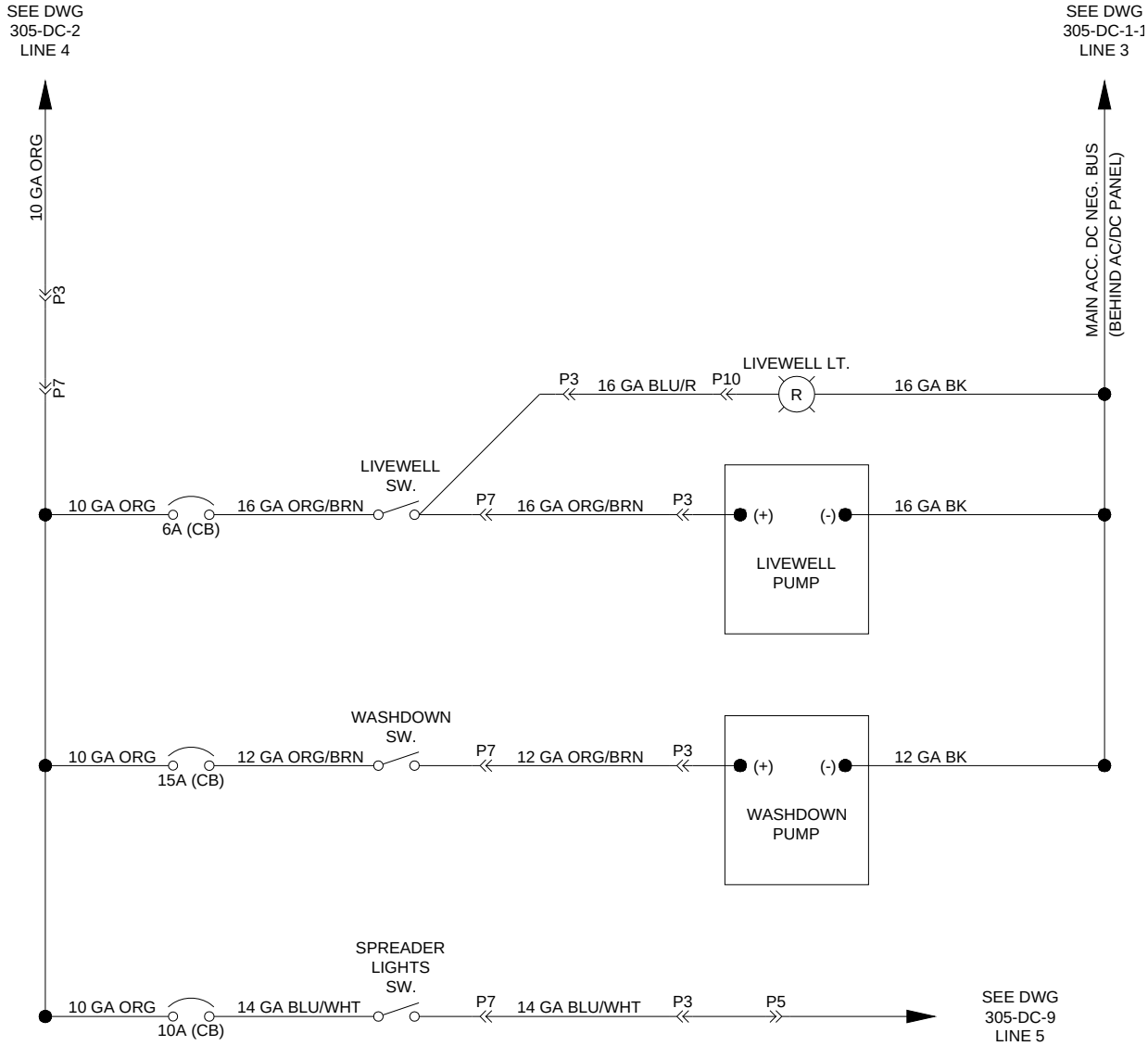

305-DC-3

12 Volt DC Helm Switch Panel Diagram

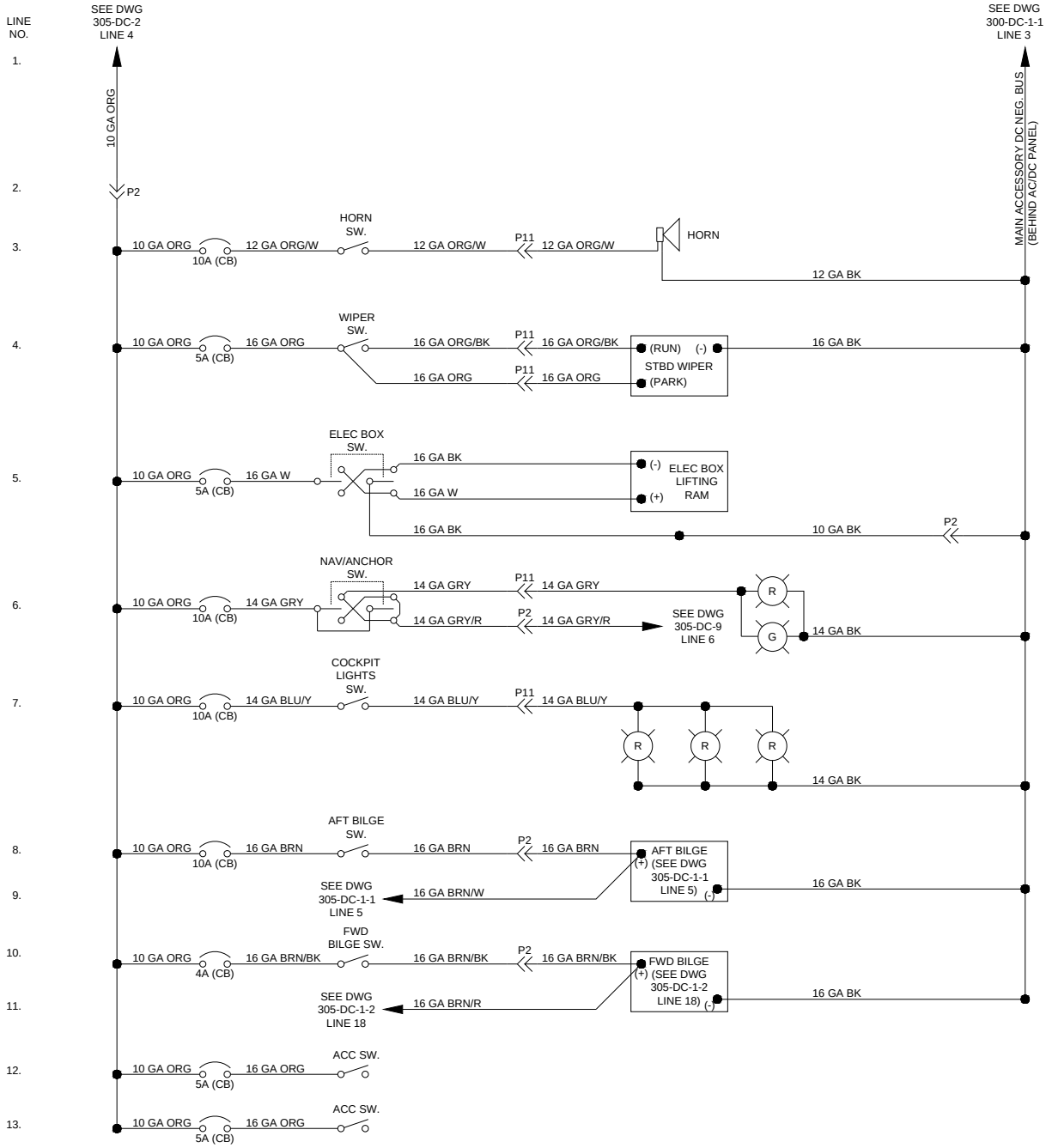

NOTES:

1) SEE LAYOUT DRAWINGS FOR COMPONENT LOCATIONS

305-DC-4

12 Volt DC Lighting Diagram

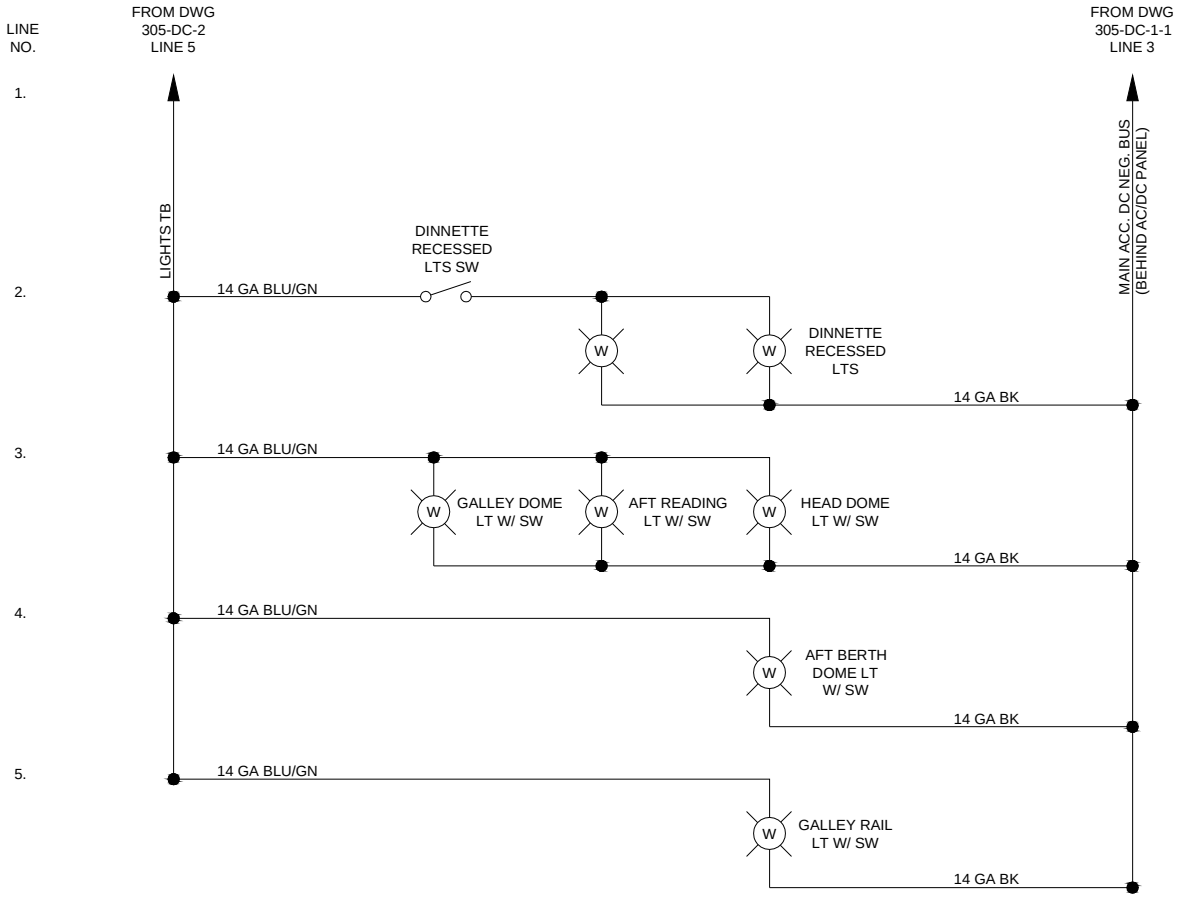

NOTES:

1) SEE LAYOUT DRAWINGS FOR COMPONENT LOCATIONS

305-DC-5

12 Volt DC Fuse Block Diagram

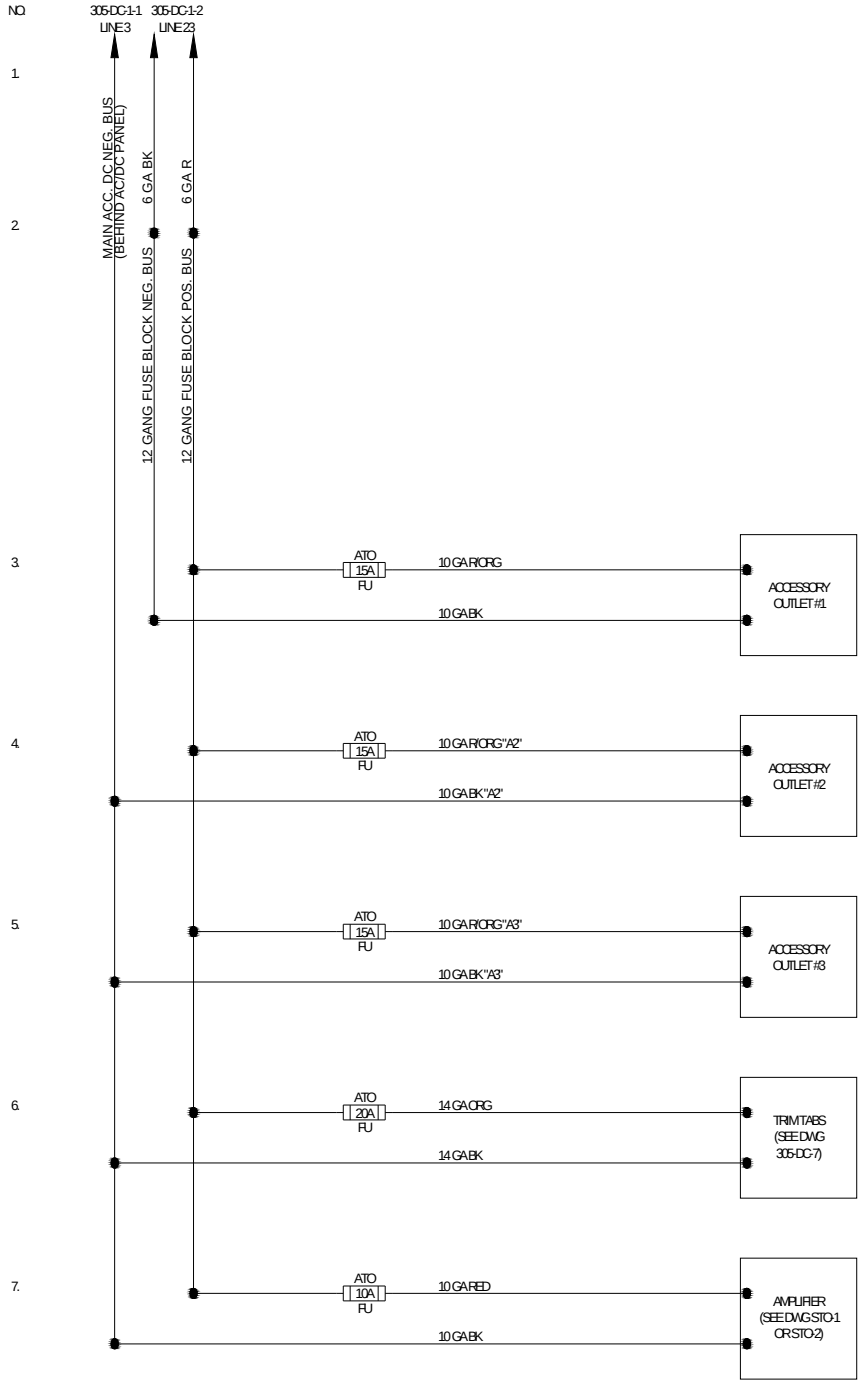

NOTES:

1) SEE LAYOUT DRAWINGS FOR COMPONENT LOCATIONS

305-DC-6

12 Volt DC Trim Tab Diagram

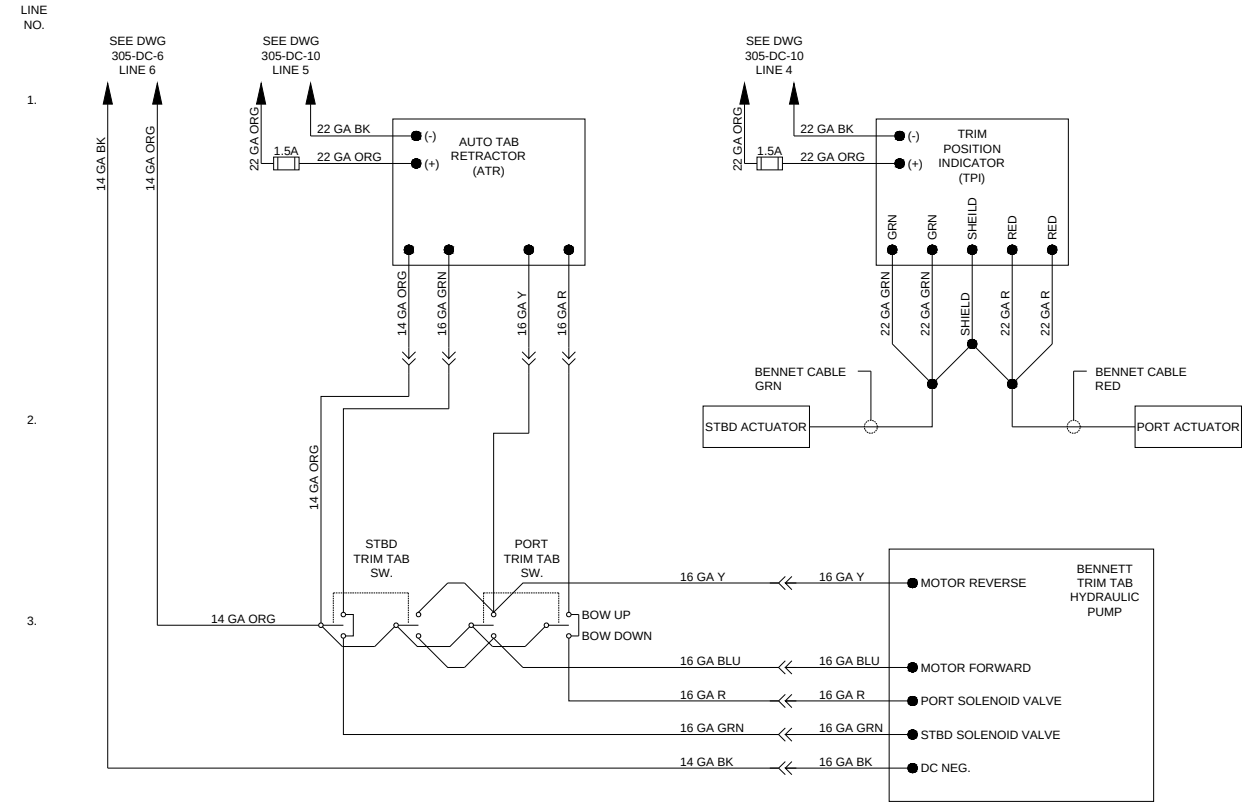

NOTES:

1) ◯— INDICATES MULTI-CONDUCTOR CABLE

305-DC-7

12 Volt DC Anchor Windlass Diagram

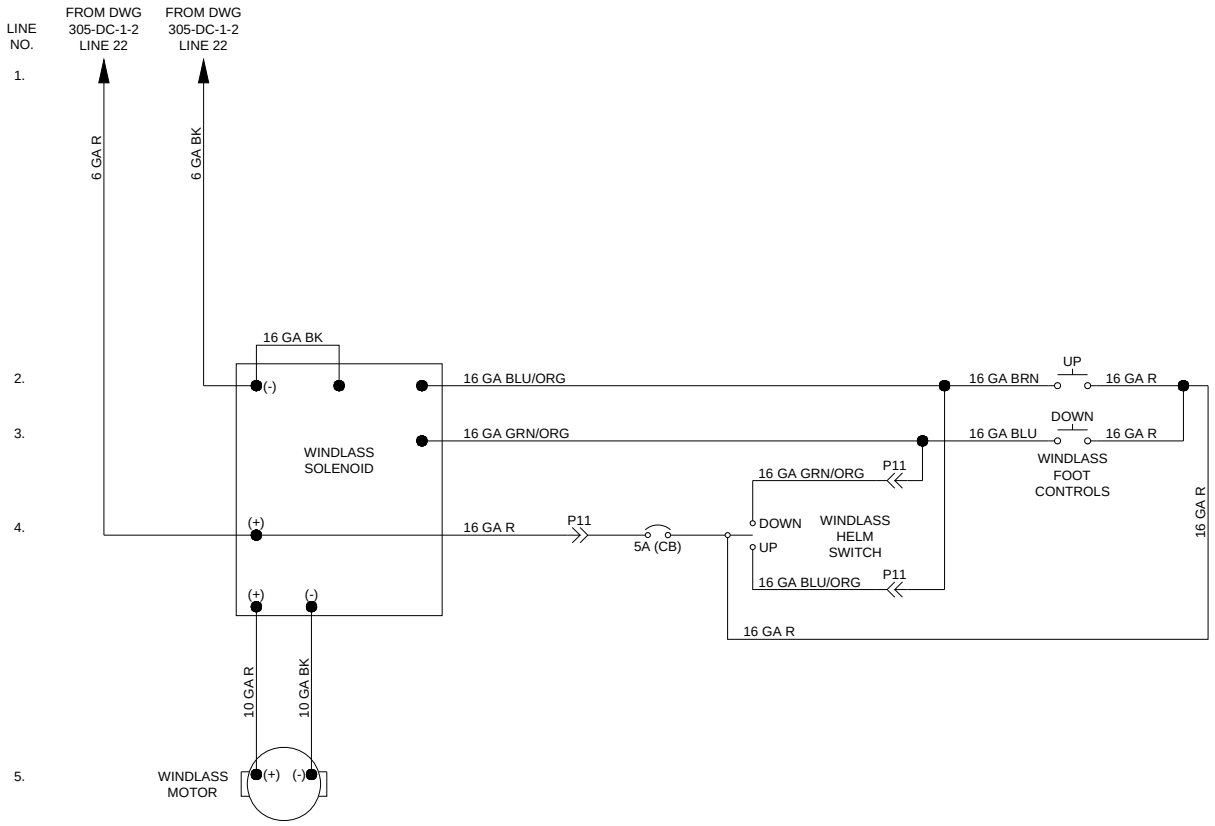

305-DC-8

12 Volt DC Hardtop Elementary Diagram

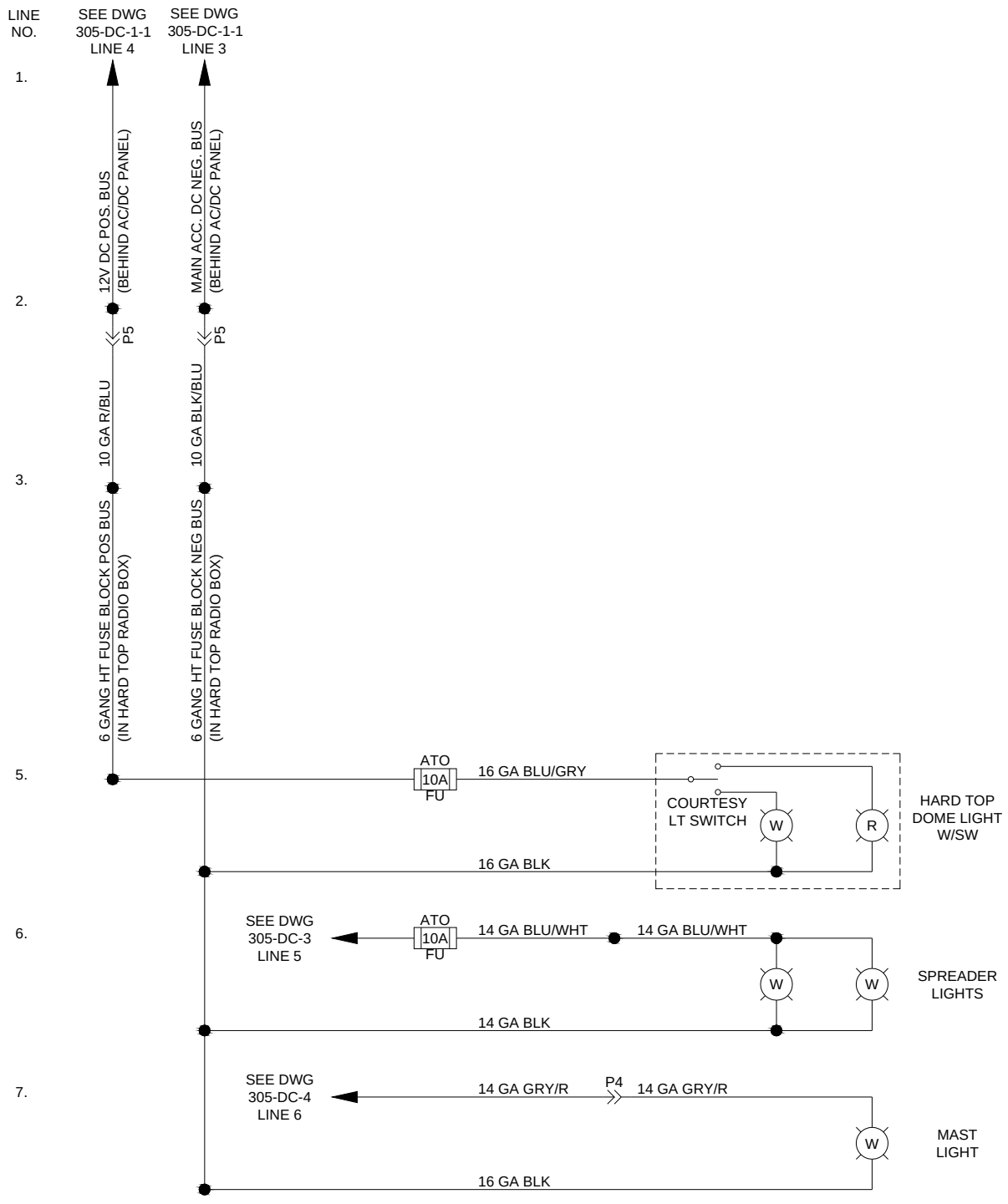

305-DC-9

12 Volt DC Ignition Circuit & Trim Diagram

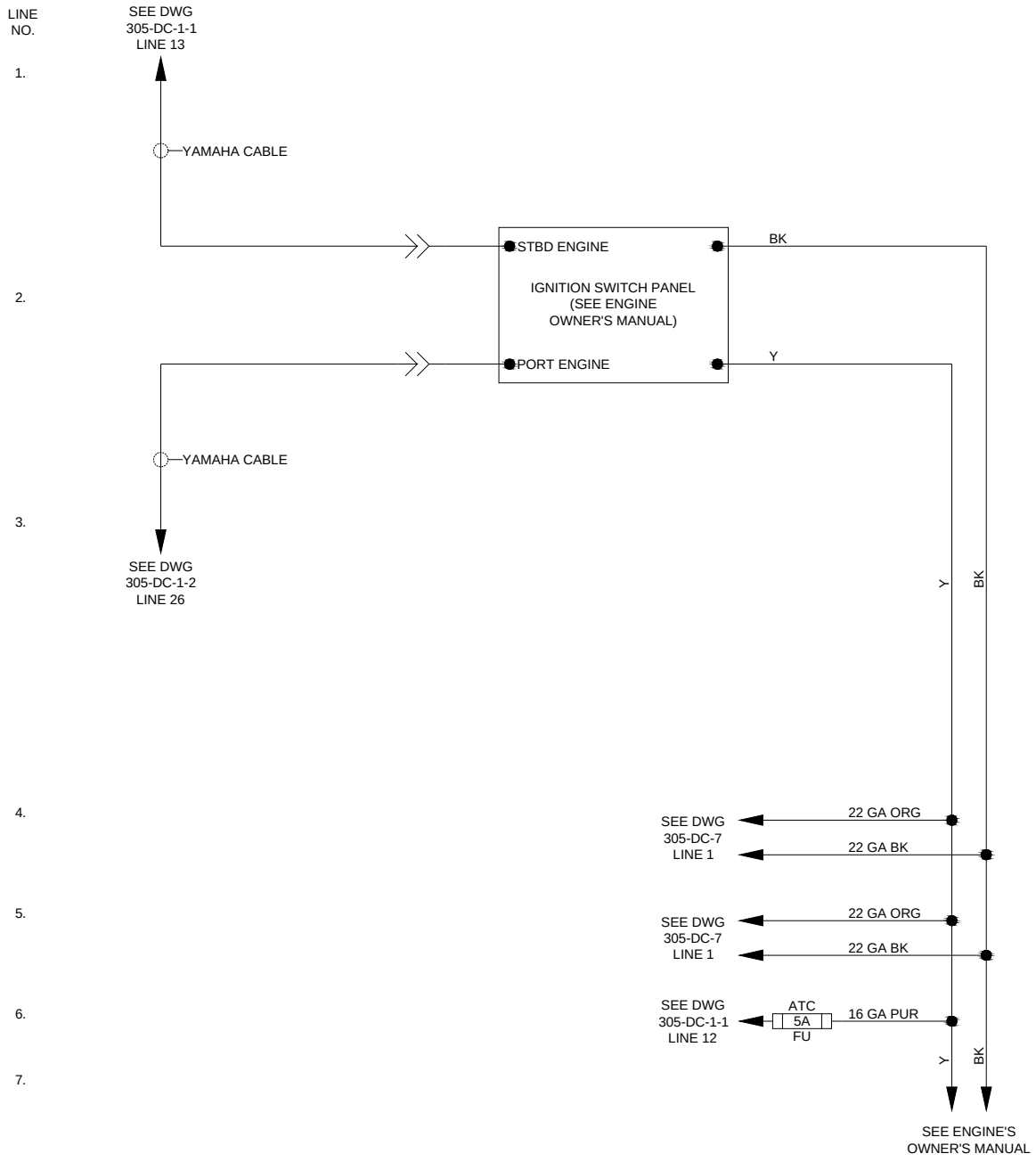

NOTES:

1) ◯— INDICATES MULTI-CONDUCTOR CABLE

305-DC-10

12 Volt DC High Bilge Water Alarm Diagram

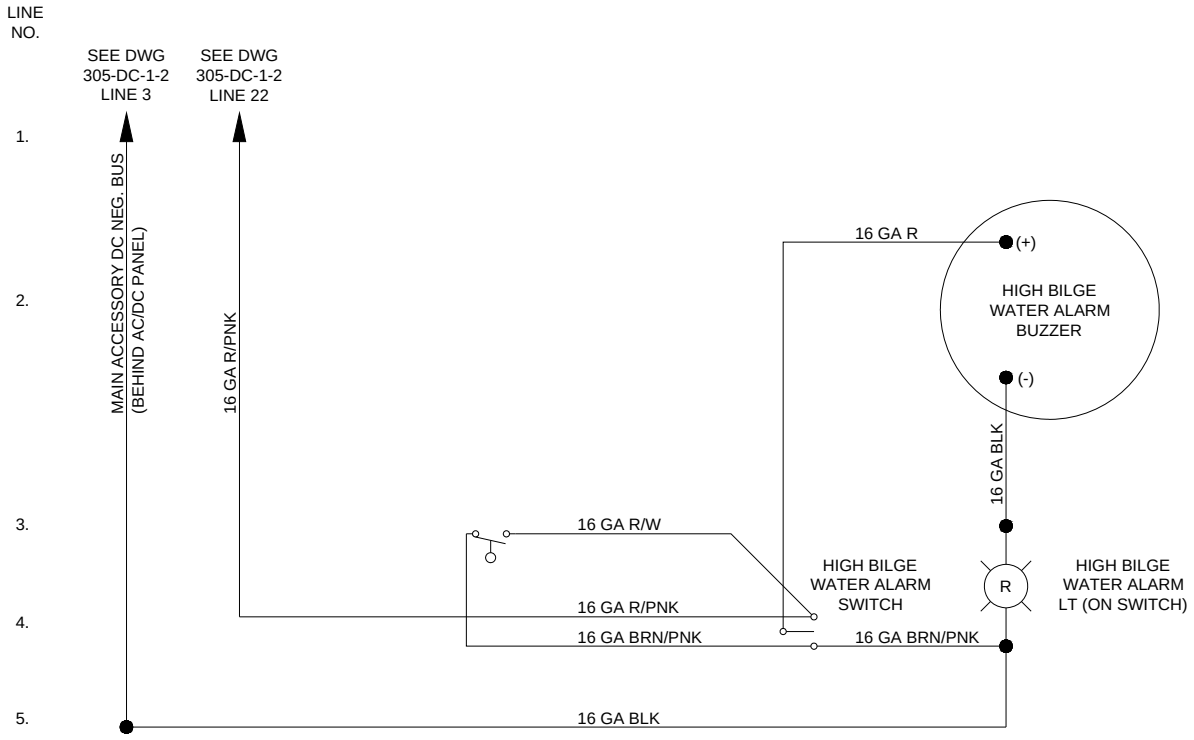

NOTES:

1) SEE LAYOUT DRAWINGS FOR LOCATIONS OF COMPONENTS

Stereo System Diagram without Satellite Radio

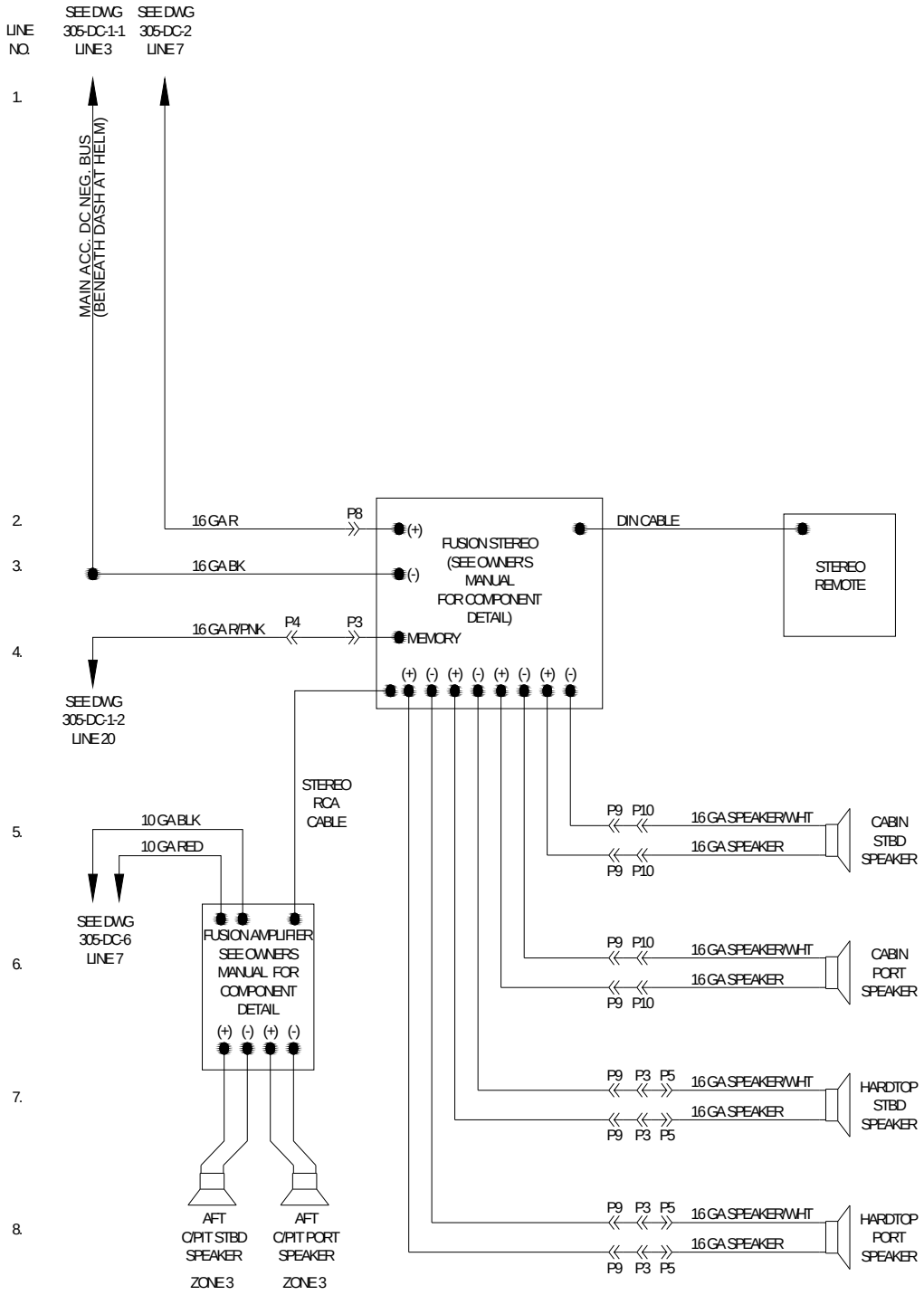

305-STO-1

Stereo System Diagram with Satellite Radio

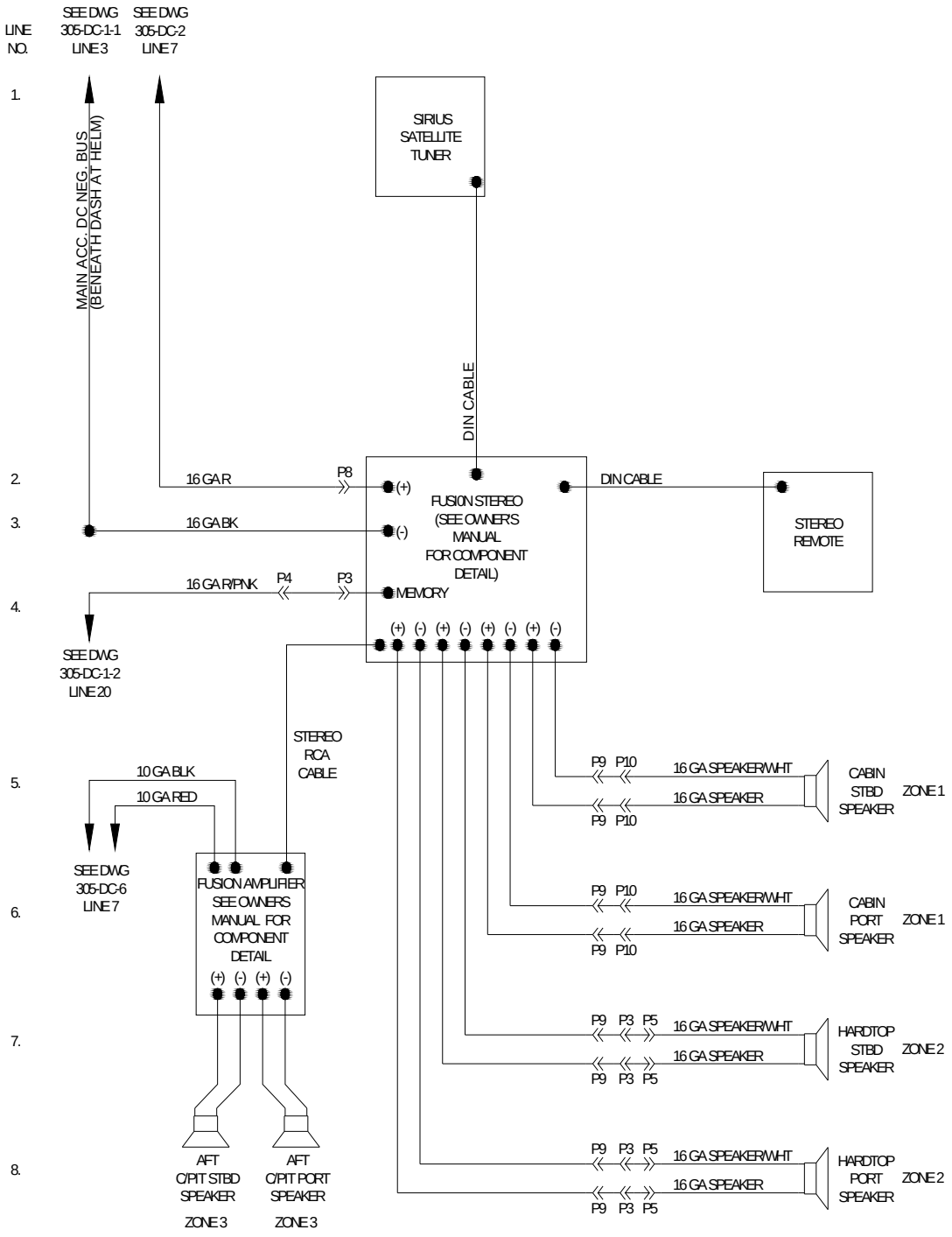

305-STO-2

TV/DVD and Phone Diagram

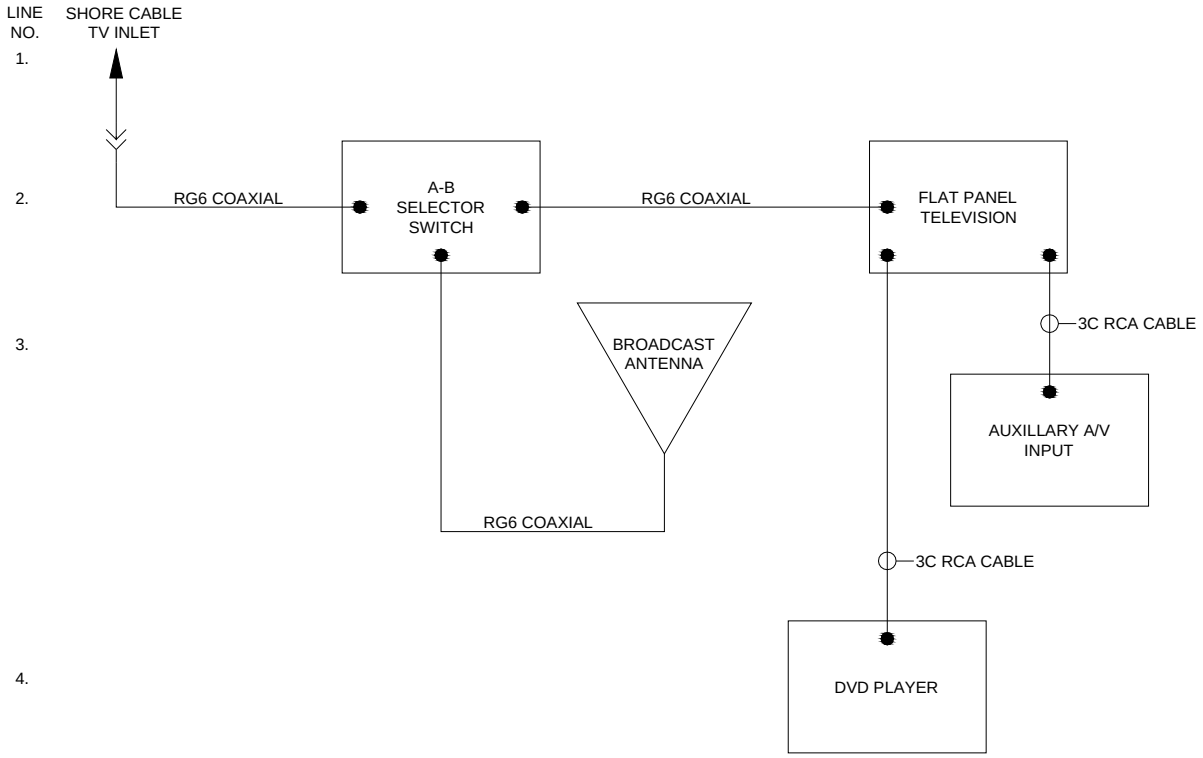

Air Condition One-Line Diagram

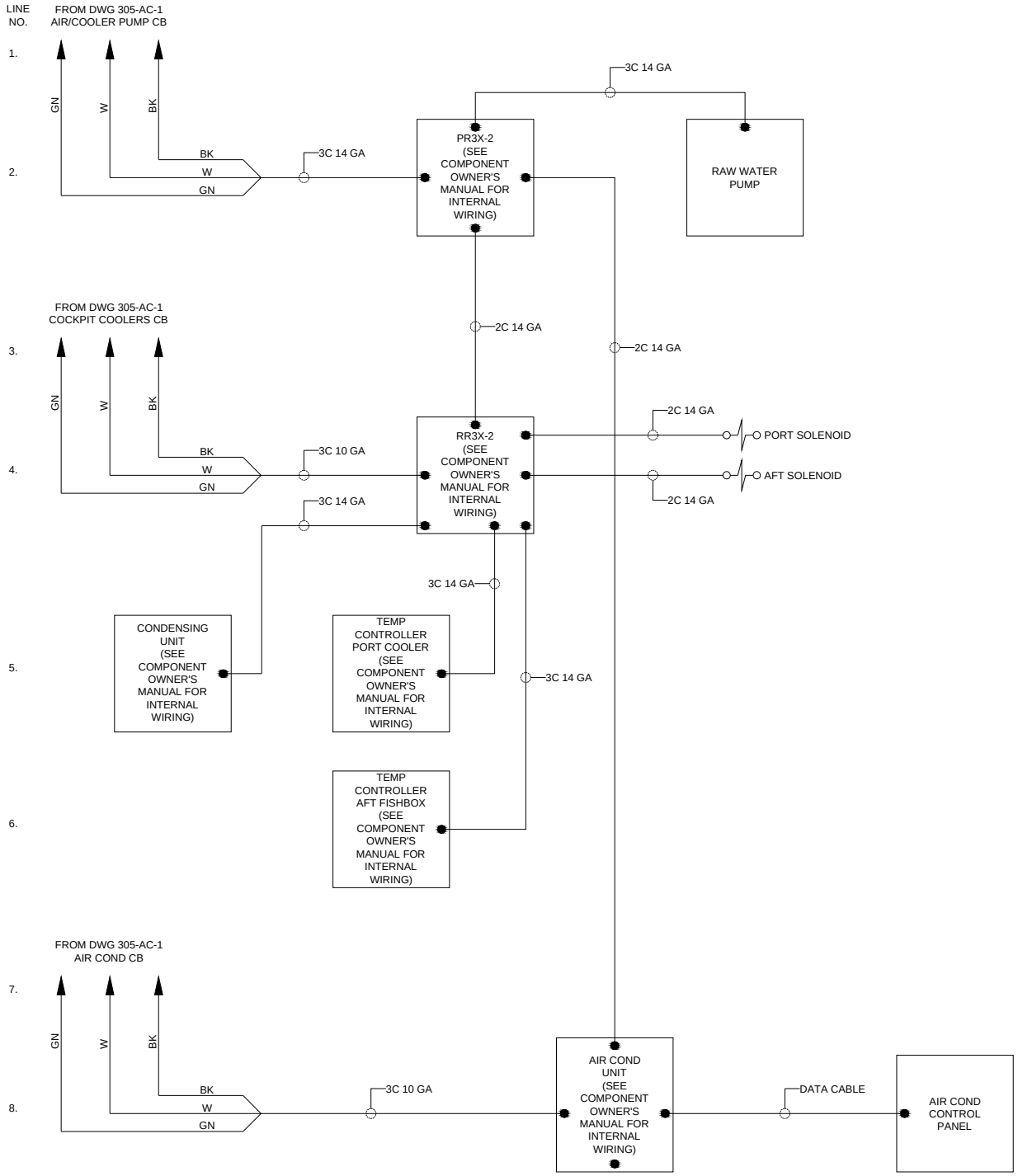

NOTES:

1) ○— INDICATES MULTI-CONDUCTOR CABLE

305-Air Cond-1

Electrical Plug Connection Detail

Plug #	Plug Type	Plug Size	Plug Connection (Male to Female)
P1	MNL	6-way	Aft hull to AC/DC Panel
P2	MNL	9-way	Aft hull to Helm Switch Panel
P3	MNL	15-way	Aft hull to Forward Hull
P4	MNL	4-way	Aft Hull to Battery Select Box
P5	MNL	12-way	Aft Hull to Hardtop
P6	MNL	6-way	Aft hull to Fuel Gauge
P7	MNL	9-way	Forward Hull to Cockpit Switch Panel
P8	MNL	9-way	Forward Hull to AC/DC Panel
P9	MNL	15-way	Forward Hull to Stereo
P10	MNL	9-way	Deck to Forward Hull
P11	MNL	12-way	Deck to Helm Switch Panel

Chapter 9: Limited Warranty

REGISTRATION OF PURCHASE:

The "Federal Boat Safety Act of 1971" requires all boat manufacturers to maintain a record of all first retail purchasers and their current addresses for the purpose of notification in case of defective parts or equipment or in case of non-compliance with standards or regulations set forth by this act. Under the act, failure to complete and return your factory warranty card for our records will waive your right to notification of defect and/or repair at manufacturer's expense

FIVE YEAR HULL TRANSFERABLE WARRANTY

Grady-White warrants to the original retail purchaser of each new Grady-White boat that, under normal use, any structural hull defects covered by the warranty and reported within five (5) years from the date of delivery to the original retail purchaser will be repaired free of charge at Grady-White's sole discretion at either the Grady-White factory in Greenville, North Carolina, at an authorized Grady-White dealer location or other Grady-White approved location as elected by Grady-White. A structural hull defect is defined as a substantial defect in the boat's hull which causes the boat to be unsafe or unfit for use under normal operating conditions. Expenses for hauling out and transportation to and from the point of repair will be the responsibility of the owner. The owner will also be responsible to remove and reinstall, at their own expense, all outboard engines, (if directly related to damage in question), as well as any and all personal effects and electronics equipment. All repairs are subject to prior written authorization by Grady-White Boats, Incorporated. **NO BOAT IS TO BE SENT TO THE GRADY-WH1TE FACTORY AND NO REPAIRS MADE WITHOUT SUCH WRITTEN AUTHORITY.**

The Five Year Structural Hull Warranty is transferable to the second and subsequent owners for the remainder of the five (5) years from the date of delivery to the original purchaser. There is no fee involved in the transfer of warranty to the new owner. The Grady-White Boats Transferable Warranty Form must be completed and returned to Grady-White at the time of sale. Upon receipt of this form, Grady-White will update its records to reflect the new ownership and warranty coverage will be provided for the remainder of the five (5) years.

ONE YEAR MATERIAL AND WORKMANSHIP WARRANTY

Grady-White further warrants to the original retail purchaser of each Grady-White boat that under normal use, defects in workmanship and material covered by the warranty and reported within one (1) year from the date of delivery to the original retail purchaser will be repaired or replaced free of charge at Grady-White's sole discretion at Grady-White's factory in Greenville, North Carolina, or at an authorized Grady-White dealer as elected by Grady-White. Expenses for hauling out and transportation to and from the point of repair will be the responsibility of the owner with all repairs subject to prior written authorization. **NO BOAT OR PART THEREOF IS TO BE SENT TO THE GRADY-WHITE FACTORY AND NO REPAIRS MADE WITHOUT SUCH WRITTEN AUTHORITY.**

Grady-White Boats, Inc. reserves the right to improve its product through changes in design or material without obligation to incorporate such changes on boats built prior to the implementation of respected change(s).

Exclusions:

This warranty specifically does not include the following:

- Damage caused by abuse, negligence, vandalism, lack of maintenance, improper storage, or accident.
- Any statements, representations, or warranties given by dealer or other third persons other than those provided within this warranty.
- Any unit which is part of a rental fleet, used for racing, or commercial purposes.
- Any unit which has been salvaged or declared a total loss.
- The following consequential damages: a) loss of time; b) inconvenience; c) towing charges; d) expenses for travel, lodging, telephone, and gasoline; e) loss or damage to personal property or loss of revenue; f) loss of use of the boat; g) storage fees for the boat.
- Equipment or accessories which are not installed by Grady-White or which carry their own individual warranties, including, but not limited to engines, outdrives, propellers, controls, steering, bilge pumps, electronics and any other part expressly warranted by the manufacturer thereof.
- Damage or deterioration of cosmetic surface finishes including gel coat cracking, crazing, blistering, discoloration, chalking or fading, chrome, plated or painted metal, aluminum and stainless steel finishes, plastics or acrylic materials, windshields, glass breakage, all vinyl upholstery and canvas, instruments and gauges, and leakage around windshields, windows, hatches, and other apertures.
- Failure of the owner to use, maintain, or store the boat as specified in the Grady-White owner's manual; and any other failure to provide reasonable care and maintenance. Normal wear and tear maintenance items are excluded from warranty coverage including but not limited to filters, bulbs, batteries, and bungees (refer to owner's manual for additional maintenance items).
- Any Grady-White boat which has been altered or modified from Grady-White factory specifications, including penetration of the hull by anyone other than Grady-White or a Grady-White authorized dealer following Grady-White factory specified procedures.
- Any failure or defect resulting from a previous repair not authorized by Grady-White.
- Any boat which has been overpowered according to the maximum Grady-White recommended engine horsepower specifications on the capacity plate affixed to the boat.

WARRANTY CLAIM PROCEDURES

Upon the discovery of a defect, the owner is to promptly contact the Grady-White dealer from whom the original retail purchaser purchased the boat who will affect the corrective action under this warranty upon prior written authorization from Grady-White Boats, Incorporated.

THESE WARRANTIES ARE EXPRESSLY MADE IN LIEU OF ALL OTHER WARRANTIES. DURATION OF ANY IMPLIED WARRANTY OF MERCHANTABILITY OR FITNESS FOR A PARTICULAR PURPOSE OR OTHERWISE SHALL BE LIMITED TO AND COINCIDENT WITH THE DURATION OF THESE EXPRESSED WARRANTIES.

THIS WARRANTY SHALL NOT BE VALID UNLESS THE FACTORY WARRANTY POSTCARD IS PROPERLY EXECUTED AND MAILED WITHIN 10 DAYS OF THE PURCHASE OF YOUR GRADY-WHITE BOAT.

GRADY-WHITE

TRANSFERABLE WARRANTY FORM

(Not for original owner use *)

*** Note: For second owner's use in transferring remainder of 5 year hull structural warranty.**

Please complete the following:

Hullid: _____

Boat Model: _____

Name: _____

Address: _____

City: _____ ***State:*** _____ ***Zip:*** _____

Home Phone: _____ ***Work Phone:*** _____

Last 4 digits of your Social Security Number (to be used for customer identification number): _____

Dealership or Previous Owner: _____

Date Purchased: _____

About Your Boat

1. ***What type of power is your boat equipped with?*** ☐ Single OB ☐ Dual OB ☐ Inboard/Outboard
2. ***What engine brand does your boat have?*** ☐ Johnson ☐ Mercury ☐ Evinrude ☐ Yamaha ☐ Volvo ☐ Other
3. ***Engine horsepower (total if twin power)*** _____
4. ***Is your new Grady-White the first boat you've ever owned?***

   ☐ Yes → Please skip to question 5a
   ☐ No → ***Please tell us about your previous boat:***
   Builder's name: _____ ***Length:*** _____
   Why did you sell this boat? _____

5a. In which of the following ways do you use your Grady-White? (Please mark all applicable in column A.)

5b. In which <u>one</u> way do you use your Grady-White <u>most often</u>? (Please mark <u>one</u> only in column B.)

	A Ways Use	**B** One Way Use Most Often
Casual cruising	☐	☐
Casual fishing	☐	☐
Serious offshore fishing	☐	☐
Socializing/entertaining	☐	☐
Watersports	☐	☐
Other:	☐	☐

6. Which of the following most influenced your selection of a Grady-White boat? (Please pick three or fewer reasons.)

About Grady-White

- Grady-White's overall reputation ☐
- Previous experience with a Grady-White ☐

About the boat itself

- Cockpit layout ☐
- Hull design/ride ☐
- Resale value ☐
- Safety/seaworthiness ☐
- Styling ☐
- Other: _____ ☐

7. How would you rate the overall value received from your Grady-White?

☐ Excellent ☐ Good ☐ Fair ☐ Poor

8. How likely would you be to consider buying each of the following brands of boats in the future?

	Definitely Consider	Might Consider	Would Not Consider	Don't Know
• Boston Whaler	☐	☐	☐	☐
• Century	☐	☐	☐	☐
• Grady-White	☐	☐	☐	☐
• Hydra-Sport	☐	☐	☐	☐
• Mako	☐	☐	☐	☐
• Pursuit	☐	☐	☐	☐
• Searay	☐	☐	☐	☐
• Wellcraft	☐	☐	☐	☐
• Other:_____	☐	☐	☐	☐

9. Which of the following magazines do you subscribe to or read often?

☐ Boating ☐ Fisherman Magazine ☐ Motorboating & Sailing ☐ Sportfishing
☐ Boating World ☐ Florida Sportsman ☐ Power & Motoryacht ☐ Wall Street Journal
☐ Boats U.S. ☐ Offshore ☐ Saltwater Sportsman ☐ Other _____

10. What is your age? ☐ Under 25 ☐ 25-34 ☐ 35-44 ☐ 45-54 ☐ 55-64 ☐ 65 or older

11. Which of the following best describes your educational background?

☐ Some High School ☐ Some College or Technical ☐ Some Post-Graduate Work
☐ High School Graduate ☐ College Graduate ☐ Post-Graduate Degree or More

12. What is your total annual household income?

☐ Under $30,000 ☐ $75,000 - $99,999 ☐ $150,000 - $174,999
☐ $30,000 - $49,999 ☐ $100,000 - $124,999 ☐ $175,000 - $199,999
☐ $50,000 - $74,999 ☐ $125,000 - $149,999 ☐ $200,000 or more

13. Does your family own a second home, where you most often do your boating? ☐ Yes ☐ No

If yes, where is your second home? _____ _____
City,State

Thank you for completing this questionnaire.
When we receive this information, you will automatically begin receiving our AnchorLine Newsletter.
Please return this form to:
Grady-White Boats, Customer Relations Dept., P.O. Box 1527, Greenville, NC 27835-1527