GRADY-WHITE

## Dear Grady-White Owner:

## Welcome aboard!

Buying and owning a boat is a very special experience. Of all the many products you'll ever own we want your Grady-White experience to be the absolute best. That means providing the descriptions, explanations and technical support that you need to enjoy your Grady-White with confidence and security.

Your Grady-White exceeds all US Coast Guard safety standards and is built to standards certified by the National Marine Manufacturers Association (NMMA). Best of all, your boat is built to Grady-White standards, standards that have served our owners through some truly extraordinary conditions since our first models built in 1959.

The seaworthiness and safety of your Grady-White is highly dependent on the operation, maintenance and care of your boat, so please read this manual thoroughly and keep it around for reference. If you need further explanation or "hands-on" help, don't hesitate to ask the people at your Grady-White dealership; they have experience with the systems and operations of your boat. If for any reason you need additional help, please feel free to call us at the factory. We sincerely want to provide you with the help and information that will make your Grady-White experience delightful.

Thanks for choosing a Grady-White. All of us at the factory and at your dealership are dedicated to earning your confidence in Grady-White Boats. Again, welcome aboard.

Sincerely yours,

Kris Carroll

Kris Carroll
President
Grady-White Boats, Inc.

Grady-White Boats, Inc.
5121 Martin Luther King Jr. Hwy, Greenville, NC 27834 • P.O. Box 1527 • Greenville, NC 27835-1527
Tel: 252-752-2111 • Fax: 252-752-4217 • http://www.gradywhite.com

## CHAPTER 1: CONSUMER INFORMATION

Owner's Packet . . . . . 1–1
Warranty Information . . . . . 1–1
Dealer's Responsibilities . . . . . 1–1
Consumer Responsibilities . . . . . 1–2
Hazard Warning Labels . . . . . 1–3

## CHAPTER 2: SAFETY

Minimum Required Safety Equipment . . . . . 2–1
Additional Recommended Equipment . . . . . 2–1
Registration Numbers . . . . . 2–1
Emergency Stop Switch . . . . . 2–2
Emergency Information . . . . . 2–2
Boating Safety Tips . . . . . 2–3
Certification . . . . . 2–4
Loading Capacity . . . . . 2–5
Carbon Monoxide . . . . . 2–5
Suggested Boating Classes And Reading Material . . . . . 2–7

## CHAPTER 3: GENERAL INFORMATION

Fueling . . . . . 3–1
Environmental Protection Agency . . . . . 3–2
Pollution Regulations . . . . . 3–2
Discharge of Oil or Hazardous Substances . . . . . 3–2
Disposal of Plastics or Garbage . . . . . 3–2
Trailering . . . . . 3–3
Predeparture . . . . . 3–3
Casting Off And Approaching The Dock . . . . . 3–3
Anchoring . . . . . 3–4
Towing . . . . . 3–4
Shallow Water . . . . . 3–5
General Information On Boat Handling . . . . . 3–5
Twin and Triple Engine Boats . . . . . 3–6
Commonly Used Nautical Terms . . . . . 3–7

## CHAPTER 4: PERFORMANCE

Performance Factors . . . . . 4–1
Engine Efficiency . . . . . 4–1
Weather Conditions . . . . . 4–1
Load Distribution . . . . . 4–1
Marine Growth . . . . . 4–1
Trim . . . . . 4–1
Propeller . . . . . 4–2
Propulsion System – Outboard . . . . . 4–2
Engine Warranty . . . . . 4–3
Steering . . . . . 4–3
Throttle/Shift Controls . . . . . 4–4

## CHAPTER 5: INSTRUMENTATION AND SWITCHES

Yamaha Instrumentation Panel . . . . . 5–1
Yamaha Command Link Plus Display . . . . . 5–1
Yamaha Helm Master™ . . . . . 5–3
Switch Panel . . . . . 5–4

## CHAPTER 6: MAINTENANCE AND SERVICE

General . . . . . 6–1
Exterior Fiberglass Finish . . . . . 6–1
Maintenance . . . . . 6–1
Cleaning . . . . . 6–1
Finish/Waxing . . . . . 6–2
Repairing . . . . . 6–3
Bottom Paint . . . . . 6–3
Canvas . . . . . 6–3
Maintenance . . . . . 6–3
Snaps and Zippers. . . . . 6–4
Vinyl . . . . . 6–4
Storage . . . . . 6–4
Upholstery . . . . . 6–5
Polyethylene/Plexiglass/Vinyl . . . . . 6–5
Scuppers . . . . . 6–5
Caulking/Gasket . . . . . 6–5
Hardware/Stainless Steel Rails . . . . . 6–5
Hardware Mounting . . . . . 6–6
Maintenance Procedure For Anodized Aluminum Components . . . . . 6–6
Fuel System Maintenance . . . . . 6–7
Fuel Tank Compartment . . . . . 6–8
Shower Sump . . . . . 6–8
Batteries . . . . . 6–8
Inverter Batteries . . . . . 6–9
LED Lighting . . . . . 6–9
290-305 330 335 336 375 & 376 DC Accy Wiring Color Fuse/Breaker 6–10
Thermofoil Wood Grain Accents Care & Cleaning Guide . . . . . 6–11

## CHAPTER 7: WINTERIZATION AND STORAGE

General . . . . . 7–1
Boat Storage . . . . . 7–1
Cleaning And Lubricating The Boat . . . . . 7–2
Draining And Water System . . . . . 7–2
Head System . . . . . 7–2
Batteries . . . . . 7–3
Engines . . . . . 7–3
Fuel System . . . . . 7–3
Storage Checklist . . . . . 7–3
Getting Boat Out After Storage . . . . . 7–3
Prior To Launching . . . . . 7–4
After Launching . . . . . 7–4

## CHAPTER 8: FREEDOM 335

***Specifications*** . . . . . ***8–1***
***Optional Features*** . . . . . ***8–1***
Accessories . . . . . 8–1
Canvas . . . . . 8–2
***Operation Of Standard Features*** . . . . . ***8–3***
Accessory Switch Panel . . . . . 8–3
Other Switches . . . . . 8–4
AC/DC Panel . . . . . 8–5
AC Powered Accessory Switches . . . . . 8–5
DC Powered Accessory Switches . . . . . 8–6
Auxiliary Fuse Panel . . . . . 8–7
Accessory Outlet - 12 Volt . . . . . 8–7
Aft Rigging Compartment . . . . . 8–7
Anchor Windlass . . . . . 8–7
Battery Charger . . . . . 8–7
Battery Select Switch . . . . . 8–8
Bilge Pumps/Float Switches . . . . . 8–8
Bilge Pump Locations . . . . . 8–8
Bow Table . . . . . 8–8
Cockpit Shower . . . . . 8–9
Compass . . . . . 8–9
Freshwater System . . . . . 8–9
Freshwater Washdown . . . . . 8–9
Hardtop . . . . . 8–9
Livewell - Raw Water . . . . . 8–9
Main Circuit Breaker . . . . . 8–10
Outlets . . . . . 8–10
Port Helm Table . . . . . 8–10
Power Assist Hydraulic Steering . . . . . 8–10
Raw Water Washdown . . . . . 8–10
Refrigerator . . . . . 8–10
Seacocks . . . . . 8–11
Sliding Cockpit Seat . . . . . 8–11
Shower Sump . . . . . 8–11
Stereo . . . . . 8–11
Trim Tabs . . . . . 8–12
VacuFlush® Head System . . . . . 8–13
Wet Bar with Sliding Seat . . . . . 8–14
Windshield Washer Solenoid . . . . . 8–14
***Operation Of Optional Features*** . . . . . ***8–15***
Air Conditioner . . . . . 8–15
Bow Thruster . . . . . 8–15
Cockpit Cooler System . . . . . 8–15
Generator . . . . . 8–16
Generator Control Panel . . . . . 8–16
Amperage Requirements . . . . . 8–16
Carbon Monoxide Detector . . . . . 8–17
Outriggers . . . . . 8–17
Shore Power . . . . . 8–18
Connecting The Shore Power . . . . . 8–18

Disconnecting The Shore Power . . . . . 8–18
Sirius Satellite Radio . . . . . 8–19
Ski Pylon . . . . . 8–19
TV/DVD . . . . . 8–19
Water Heater . . . . . 8–19
***Informational Drawings . . . . . 8–20***
Access Plate And Rigging Tube Location . . . . . 8–20
DC Accessory Wiring (1 of 2) . . . . . 8–21
DC Accessory Wiring (2 of 2) . . . . . 8–22
Cockpit Cooler Layout . . . . . 8–23
Diesel Generator Layout . . . . . 8–24
Fuel System . . . . . 8–25
Typical Outboard Switch Panel Wiring . . . . . 8–26
Battery Wiring with Select Switches . . . . . 8–27
Freshwater System . . . . . 8–28
Safety Labels And Location . . . . . 8–29
Livewell/Raw Water Washdown Layout . . . . . 8–30
Livewell/Raw Water Washdown System . . . . . 8–31
VacuFlush® Head Layout . . . . . 8–32
Stereo System Layout . . . . . 8–33
Thru Hull Detail . . . . . 8–34
Air Conditioner Layout . . . . . 8–35
Bow Thruster Layout . . . . . 8–36
Hardtop Wiring . . . . . 8–37
AC Accessory Wiring . . . . . 8–38
Inverter Layout . . . . . 8–39
12V DC Cabin Switch Panel Diagram . . . . . 8–40
12V DC Accessory Switch Panel Diagram . . . . . 8–41
12V DC Ignition Circuit & Trim Diagram . . . . . 8–42
12V DC Fuse Block Diagram . . . . . 8–43
12V DC Trim Tab Diagram . . . . . 8–44
12V DC Anchor Windlass Diagram . . . . . 8–45
12V DC Hardtop Diagram . . . . . 8–46
120 V AC Electrical Diagram . . . . . 8–47
AC - One Line Diagram . . . . . 8–48
Helm Air, Cabin Air, and Cockpit Cooler . . . . . 8–49
Cabin Air Conditioning . . . . . 8–50
Helm Air Conditioning . . . . . 8–51
Cockpit Cooler Diagram . . . . . 8–52
High Bilge Water Alarm Diagram . . . . . 8–53
12V DC Stereo Diagram . . . . . 8–54
TV/DVD Diagram . . . . . 8–55
Electric Cabin Berth (Out Position) Diagram . . . . . 8–56
Electric Cabin Berth (In Position) Diagram . . . . . 8–57

## CHAPTER 9: LIMITED WARRANTY

Registration Of Purchase: . . . . . 9–1
Five Year Hull Transferable Warranty . . . . . 9–1
One Year Material And Workmanship Warranty . . . . . 9–1

Warranty Claim Procedures . . . . . 9–3
Transferable Warranty Form . . . . . 9–4

# TABLE OF CONTENTS

# Chapter 1: Consumer Information

## OWNER'S PACKET

Your Grady-White has many features and accessories that have existing printed material provided by the various equipment manufacturers. This information is compiled in a package that we will reference throughout this manual as an "Owner's Packet." This Owner's Packet includes a Grady-White Owner's Manual and Engine Manual(s) to advise on operation, service, specifications, maintenance, warranty, and other useful facts. While reading your Grady-White manual, you will find other technical literature referenced as resources for detailed information. The Owner's Packet will also consist of operation guides, informative labels, and product warranties you will need to be acquainted with. Your Owner's Packet can also be used to retain instructions and data compiled on additional equipment and accessories installed after delivery.

*Sportfish, Cruisers, Yachts Owner's Manual*, a book published by the National Marine Manufacturer's Association (NMMA), has been included with your Owner's Packet as a supplement. This publication will be referenced in your Grady-White Owner's Manual to present additional instructions and information on basic boating.

## WARRANTY INFORMATION

The Grady-White warranty is located on the next to last page of this manual. **Upon the purchase of your new Grady-White Boat, the dealer will fill out a warranty card.** This card will be kept on file at the dealership and at the Grady-White factory. A copy will be provided for your records and should be kept with other valuable documents for future reference. For questions regarding your warranty please contact your dealership.

## DEALER'S RESPONSIBILITIES

Throughout the fabricating and assembly processes, your Grady-White has undergone a series of strict inspections. Subsequent to the final factory overview, your dealer must perform additional pre-delivery checks and approve your Grady-White for delivery.

**DEALER RESPONSIBILITIES INCLUDE PROVIDING THE FOLLOWING:**

- An orientation of the general operation of your Grady-White.
- A warranty card to be completed and signed by the dealer and the customer. This warranty card is to be sent to Grady-White Boats to validate the warranty.
- An explanation of safety issues regarding the use of containment systems and components.
- A complete Owner's Packet containing literature and information regarding your Grady-White and its separate warranted products' operation, installation, and maintenance instructions.
- A review of all warranties pointing out the importance of mailing warranty and registration to various manufacturers within the required time limits.
- Guidance on acquiring local and out of area service during and out of warranty periods.

## CONSUMER RESPONSIBILITIES

**THE FOLLOWING ARE RESPONSIBILITIES OF THE GRADY-WHITE OWNER:**

- Read and understand the express limited warranty.
- Study in detail all literature and instructions enclosed, and use all equipment in accordance.
- Examine the boat and confirm all systems are working suitably at the time of accepting delivery.
- Render proper maintenance and periodic servicing of the boat in accordance with suggestions in the Owner's Manual.
- Return the boat to the selling dealer for an engine inspection. Refer to the engine's owner's manual for the proper maintenance schedule.

Grady-White Boats has a permanent record of your boat which is retained under its "**H**ull **I**dentification **N**umber" (HIN). Data regarding equipment and accessories, as well as dealer/shipping information is documented. When contacting your dealer concerning warranties or service, please have all relevant information such as serial numbers (HIN) and model number available. This information is on your copy of the warranty card.

The "**H**ull **I**dentification **N**umber," located on the starboard side of the transom, is a significant source of identification and must be noted in all correspondence and orders. Failure to include the HIN only creates delay.

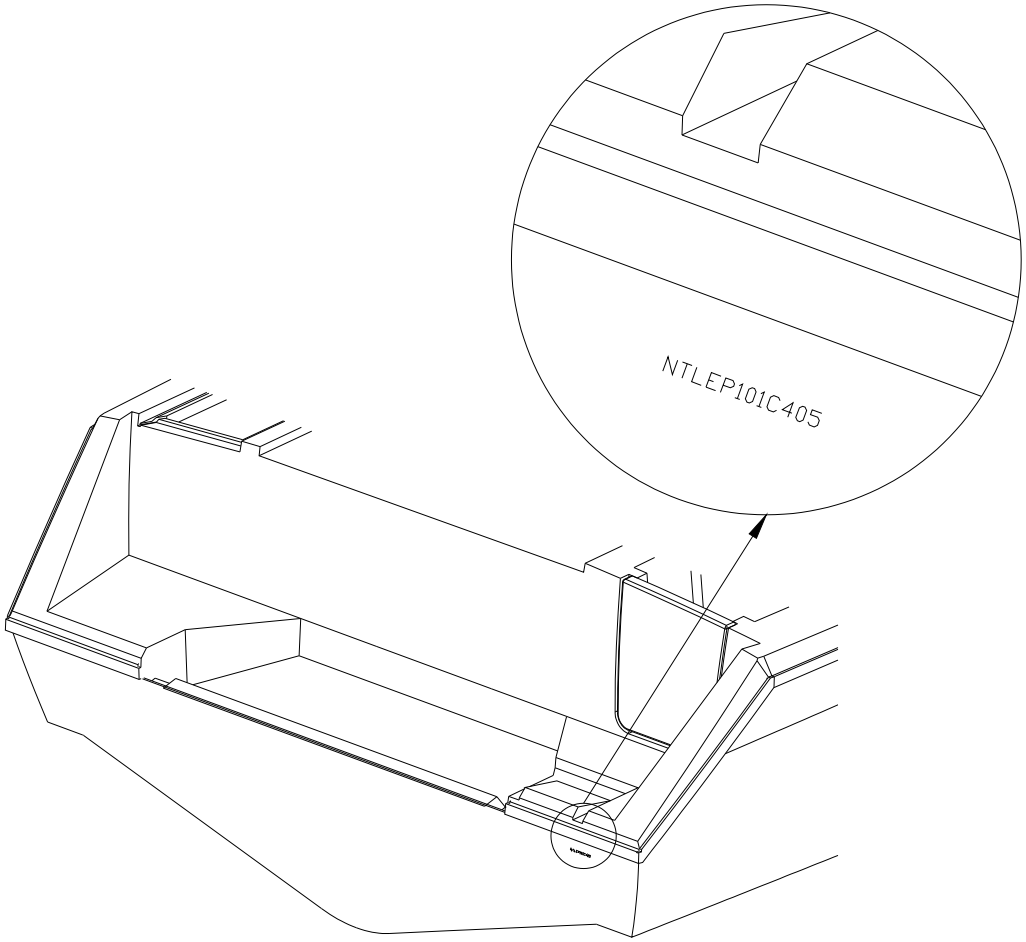

## HAZARD WARNING LABELS

The hazard warning labels shown below are applied throughout this manual to alert the customer of potentially dangerous situations that can lead to death, personal injury, and/or product damage. We urge you to observe these warnings and comply with all safety recommendations.

| ⚠ DANGER |
| --- |
| **This symbol alerts you to imminently hazardous situations which WILL cause severe personal injury or death if the warning is ignored.** |

| ⚠ WARNING |
| --- |
| **This symbol alerts you to potentially hazardous situations or unsafe practices that COULD result in severe personal injury or death if the warning is ignored.** |

| ⚠ CAUTION |
| --- |
| **This symbol alerts you to potentially hazardous situations that MAY result in minor personal injury or cause product or property damage if the warning is ignored.** |

| NOTICE |
| --- |
| **This symbol calls attention to installation, operation, or maintenance information which is important for proper operation, but is not hazard related.** |

# Chapter 2: Safety

## MINIMUM REQUIRED SAFETY EQUIPMENT

The US Coast Guard (USCG) requires that every boat have specific equipment on board. Check with local regulations on mandatory equipment apart from the list of Coast Guard requirements. See *Sportfish, Cruisers, Yachts Owner's Manual,* page 23, for details on the following minimum required safety equipment.

- **Fire Extinguisher**
  Boats should be equipped with a marine approved fire extinguisher.
- **Personal Flotation**
  All passengers must have an USCG approved personal flotation device (PFD).
  **Children and non-swimmers are advised to wear a PFD at all times.**
- **Sound Signaling Device (Horn, Bell Or Whistle)**
  Your Grady-White is equipped with a horn that meets USCG requirements.
- **Visual Distress Signals**
  USCG approved visual distress signals are required on U. S. waters. See page 42 of the pamphlet *Sportfish, Cruisers, Yachts Owner's Manual* enclosed with this manual for more information.
- **Lighting**
  Grady-White boats are equipped with navigational lights that meet requirements for recreational vessels for inland and international waters.

## ADDITIONAL RECOMMENDED EQUIPMENT

In addition to the required safety equipment, there are additional items that will provide an extra margin of safety and convenience for you and your passengers while boating. For an extended list of basic gear, tools and spare parts, reference page 24 of the pamphlet *Sportfish, Cruisers, Yachts Owner's Manual* enclosed with this manual.

Keep tools and spare parts in good condition. Replace parts removed from the spare parts kit. Most importantly, use US Coast Guard approved or marine certified parts where applicable. Conditions found requiring corrective action should be worked on by a qualified repairman.

## REGISTRATION NUMBERS

Federal and State laws require a powerboat to be registered in the State where it is primarily used. Registration numbers and validation stickers must be displayed according to regulations. The registration certificate must be on board when boating. The boat serial number or Hull Identification Number (HIN, *page 1–2*) is required on the registration form. The HIN is located on the upper right hand corner of the transom, and is the most important identifying factor. The HIN should be included in all documents and correspondence to provide you timely service.

## EMERGENCY STOP SWITCH

All Grady-Whites are equipped with an emergency stop switch. This is a safety feature that if used properly will shut the engine(s) down if the operator leaves or falls from the helm position. The ignition shutdown system includes a shut-off switch, switch clip, lanyard and lanyard clip. The lanyard clip is attached to the operator. If a situation arises where the boat should stop, a pull on the cord to release the clip from the shut-off switch will shut down the engine(s). To reset the emergency stop switch, simply reinstall the switch clip. The decision to use the emergency stop switch rests with the owner/operator. See page 82 in *Sportfish, Cruisers, Yachts Owner's Manual.*

## EMERGENCY INFORMATION

While boating, unpleasant situations may develop. You should prepare yourself on how to cope with them whether they happen aboard your vessel or someone else's. Anticipate and plan for specific situations such as fire, man overboard, collision, etc. to give you the confidence and ability necessary to handle an emergency. The key is to remain calm. For emergency procedures, see Section 4 in *Sportfish, Cruisers, Yachts Owner's Manual.*

- **Rendering Assistance**

  The owner or operator of a vessel is required by law to render all practical or necessary assistance to any person or vessel affected by collision, accident or casualty. **However, you are not required to endanger your vessel or passengers to render assistance.**

- **Accident Reporting**

  Report all boating accidents to your local authorities. Federal regulations require boat operators involved in an accident to submit a written report within 48 hours. **In the event of death or disappearance, notification is required immediately** by phone or radio in addition to the written report. These reports can be submitted to the State Boating Law Administrator. Forms can be obtained through the USCG, local harbor patrol offices, sheriff, and police stations.

- **Lightning Precautions**

  This awareness is included to ensure the safety of the owner and passengers. Always be mindful of the weather! When a lightning storm advances, certain safety precautions should be taken. Dock the boat and seek shelter on land. If this is not possible, seek refuge inside the boat until the storm has passed. **Stay out of the water!** Lightning will seek a ground when it strikes and may pass through metal components if it hits your boat. For this reason, avoid contact with metal parts of the boat under these conditions.

## BOATING SAFETY TIPS

Safety is an important aspect of boating. Your safety as well as the safety of your passengers and vessel is your responsibility. The following precautions and the ones mentioned in section 1 of *Sportfish, Cruisers, Yachts Owner's Manual* will add to you and your passengers' boating safety and pleasure.

- Before operating your Grady-White **read and study all operation and maintenance manuals**. It is important that you fully understand how to use your boat. Contact your Grady-White dealer for questions. Proper use and service will insure quality performance and longevity of your boat.
- A written float plan left with a **responsible** person can serve as valuable information should you not return as scheduled. Upon returning, your primary responsibility is to notify the person of your return.
- **Never** operate or allow anyone to operate your boat while under the influence of drugs or alcohol.
- **Individuals under the age of 16 should not be allowed to operate your boat. Inexperienced drivers should have constant and direct supervision.**
- Instruct at least one passenger on the fundamentals of basic boating and safe operation in the event of an emergency.
- While boating, passengers should be settled in a safe position. Use hand holds and rails for steadiness. Do not allow bow, transom or gunwale riding. The captain is ultimately responsible for their passenger's safety.
- Keep your boat speed under control. Respect for other boaters and those on shore are common courtesies. The boat's operator is responsible for injury or damage caused by the boat or the wake. Your wake could swamp a smaller craft and endanger its passengers. Stay alert for posted **"No Wake Zones"**.
- Become familiar with the handling personality and limitations of your boat.
- **Never allow swimmers/skiers to enter or exit the boat with engine(s) running.** A shift lever in neutral could become engaged accidentally. Also, exhaust fumes from the outboard engine(s) contain carbon monoxide gas. These fumes may concentrate in this area. *See more information on "Carbon Monoxide" on page 2–5*
- Obtain information and a chart for new areas when possible.
- Clean water and air are responsibilities for all persons. Use litter containers on board and dispose of refuse properly. See *"Pollution Regulations" on page 3–2*.
- Know and obey the **"Rules of the Road"**. See *Sportfish, Cruisers, Yachts Owner's Manual,* beginning on page 25, for a better understanding of right of ways, signals and waterway markers.

## CERTIFICATION

This label means your Grady-White is certified by the National Marine Manufacturers Association (NMMA). With this tag, you are assured the fuel system, electrical system, navigation lighting, ventilation, steering and other design elements are not only in compliance with the US Coast Guard regulations, but also meet the more stringent standards of the NMMA. The NMMA is a national trade organization serving all elements of the recreational boating industry including manufacturers of boating equipment. With this tag, you can have confidence in the safety of your boat.

This label means that Grady-White has designed and built your boat to the ABYC standard H-8, buoyancy in the event of swamping. Basic flotation is defined as having enough foam in the boat to create buoyancy and prevent sinking under swamped conditions.

## LOADING CAPACITY

Though overloading is a primary cause of many boating accidents, improper loading is equally hazardous. Boaters should know the amount of weight on board and evenly **distribute** the weight within the boat.

At the helm station you will find a NMMA Yacht Certification tag. This means your yacht complies with the Coast Guard safety standards. (NOTE: Any boat with an overall length of 26 feet or greater is defined as a "yacht" by NMMA.

## CARBON MONOXIDE

**⚠ WARNING**

**CO is produced by all combustion engine(s) and generator sets.**
**Avoid brain damage or death from carbon monoxide.**
**Keep cockpit and cabin areas well ventilated.**
**Avoid blockage of exhaust outlets.**
**Signs of exposure include headache, nausea, dizziness and drowsiness.**

Carbon Monoxide, commonly written CO, is a colorless, odorless gas emitted from any boat's exhaust. The gas is similar in weight to the air we breathe. Therefore, it cannot be expected to rise or fall, but will accumulate in confined spaces.

Carbon monoxide is **poisonous**, and potentially **fatal** if breathed over an extended period of time. Symptoms of CO poisoning include dizziness, nausea, headache, sleepiness, vomiting, throbbing in the temples, muscular twitching, and an inability to think clearly. **If you or anyone else experience these symptoms, immediately get away from fumes and into an area where plenty of fresh air can be consumed. If any symptoms from above persist, seek medical attention.**

**Carbon monoxide can accumulate in cabins and under canvas.** If your boat is equipped with a canvas that encloses the aft cockpit and propulsion equipment, do not operate the boat with this canvas closed.

Outboard engine exhaust fumes contain carbon monoxide. These fumes may concentrate at the motorwell area. Do not board your vessel with the engine(s) running. Also, do not occupy the motorwell area with the engine(s) running.

Operators need to be aware of the influence of other boats on their vessel as well as the effects they have on neighboring crafts. Of primary concern is the operation of an auxiliary generator with boats moored along side each other. This situation creates an atmosphere which is filled with CO, and extremely dangerous.

If your CO monitor alarm sounds, indicating CO is present, immediately remove yourself from the area and go to a location with fresh air. Shut off sources of CO such as engines and generators and open doors and windows to ventilate the affected area if possible. If you or anyone aboard your vessel experiences persistent symptoms of CO poisoning seek medical attention right away.

**⚠ WARNING**

**BE AWARE of the significance your exhaust may have on other vessels. Likewise, BE AWARE that the operation of other vessel's equipment may influence the carbon monoxide concentration on YOUR vessel.**

**⚠ WARNING**

**Exhaust fumes from engine(s) contain (CO). Boats with canvas deployed are more likely to collect exhaust fumes. Avoid brain damage or death from (CO). Keep cockpit and cabin areas well ventilated. Signs of exposure include headache, nausea, dizziness and drowsiness.**

## SUGGESTED BOATING CLASSES AND READING MATERIAL

Like a car, boats must be operated according to safety rules and traffic regulations. Although we include some basic boating tips in this manual, a thorough review of the safety rules and regulations for boating is beyond the scope of this text.

We support the work of the United States Coast Guard Auxiliary and the United States Power Squadrons. We urge you to attend any instructional classes sponsored by these organizations. Reference page 10 of *Sportfish, Cruisers, Yachts Owner's Manual* for training options, and page 28 for information on charts and maps. For further knowledge on boating, we advise that you review the following publications:

- **Piloting, Seamanship And Small Boat Handling**
  (Chapman)*

- **Boatman's Handbook**
  Tom Bottomly

- **Sorensen's Guide To Powerboats**
  Eric Sorensen

**FOR MORE INFORMATION ON BOATING SAFETY COURSES IN YOUR AREA CALL:**

- Boating Education Hotline .....1-800-336-BOAT (2628)
- US Coast Guard Boating Hotline .....1-800-368-5647
- Contact Your Local Coast Guard

# Chapter 3: General Information

## FUELING

| ⚠ WARNING |
| --- |
| **Safety during fueling requires CAUTION and COMMON SENSE.** |

Please study the following precautions carefully. Consult your dealer if you have any questions. Prior to your initial fill-up, check your engine manual to confirm the type of fuel and octane rating specified by the manufacturer. Tanks should be filled when the boat is not in use to reduce the accumulation of moisture and condensation. Add stabilizer to fuel that won't be used in 60-90 days.

Fuel containing up to a 10% ethanol blend (E10) is acceptable for use in your boat. Do **not** use alcohol blended fuel that has greater than 10% ethanol such as E15 or E85. These concentrations may be harmful to fuel system components and outboard engines. Other considerations related to Ethanol fuel blends:

- Avoid mixing E10 with fuels that contain MTBE, an additive to gasoline in some fuel blends that oxygenates the fuel to reduce emissions.
- Use a 10 micron fuel filter to capture particulate contaminants that may be loosened from the fuel system due to the solvent nature of alcohol blended fuels.
- Carry spare fuel filters with a 10 micron rating on your boat for emergency replacement if required.

Before Fueling:

- Shut down all engines.
- Turn battery select switch(es) to "off" to insure that all fans, lights, etc. are off.
- Close all ports, hatches, windows and engine compartments to prevent fumes from accumulating in closed areas.
- Extinguish cigarettes and all other lighted materials.
- Have a fire extinguisher near.

During Fueling:

- Observe all safety regulations for the safe handling of fuel.
- Keep the fuel supply nozzle in contact with the fuel fill opening to prevent any static sparks.

After Fueling:

- Tighten the fuel cap until the audible clicking indicates it is secure. Check fuel hoses, connections, and tanks for leaks or deterioration. Wash and clean up any spilled fuel. Dispose of clean up rags or sponges on shore. Do not store these clean up rags in the boat.
- After fueling ventilate all ports, windows, hatches and other closed areas. Conduct a "sniff test" to make certain all fumes are vacant before using the battery select switch(es).

See warnings and check list in Section 6, page 46 of the *Sportfish, Cruisers, and Yachts Owner's Manual*. Reference *"Fuel Tank Compartment" on page 6–8* for more information on cleaning the fuel tank compartment.

## ENVIRONMENTAL PROTECTION AGENCY

All Grady-White boats meet the Environmental Protection Agency standards in effect at the time of manufacture. All boats have the EPA label incorporated within their NMMA certification label.

## POLLUTION REGULATIONS

The U.S. Coast Guard defines restrictions on the discharge of oil or hazardous substances and plastics or garbage in the "Federal Requirements for Boating and Boating Safety". You should have received this pamphlet when you registered your boat. Detailed below is a summary of those regulations. You should read the pamphlet and become familiar with any local restrictions where you operate your vessel. Passengers or crew members aboard your boat should also be notified of these regulations.

### Discharge of Oil or Hazardous Substances

The Federal Water Pollution Control Act prohibits the discharge of oil or hazardous substances, which may be harmful, into or upon U.S. navigable waters. Vessels 26 feet (7.9m) in length or over must display a placard at least 5" x 8" (12.7cm x 20.3cm) with the text shown below. If your boat is 26 feet or greater in length, an adhesive backed label that meets these requirements is provided in your owner's packet. It is your responsibility to display this placard on the vessel in a conspicuous place in the machinery space or at the bilge pump control.

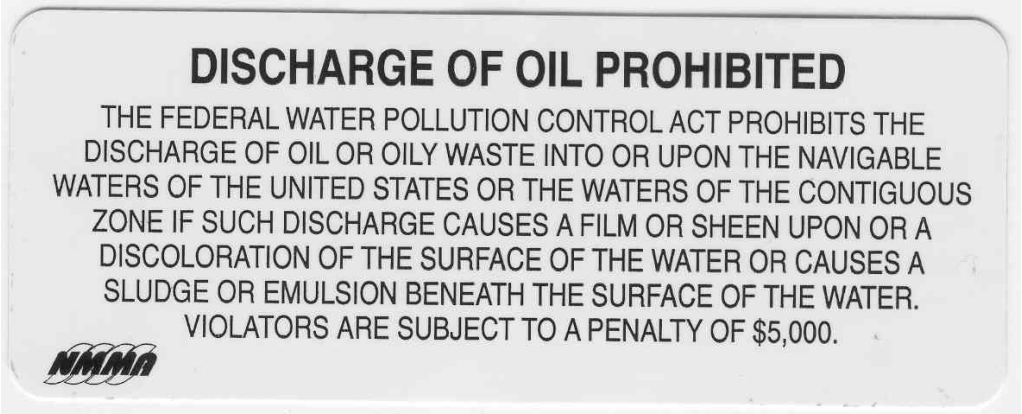


### Disposal of Plastics or Garbage

The MARPOL ANNEX V is the Act to prevent pollution from ships and other vessels. Federal regulations prohibit the discharge of plastic garbage anywhere in the marine environment. Plastic includes, but is not limited to: synthetic fishing nets, ropes, lines, straws, six pack holders, styrofoam cups and lids, bottles, buckets and plastic bags. These regulations also restrict the disposal of other types of garbage within specified boundaries from shore. Any vessel 26 feet (7.9m) and over must display the placard below or a similar version at least 4" x 9" (10.2cm x 22.9cm) which details the regulations. If your boat is 26 feet or greater in length, an adhesive backed label that meets these requirements is provided in your owner's packet. It is your responsibility to display this placard on the vessel in a prominent location readily accessible to crew and passengers.

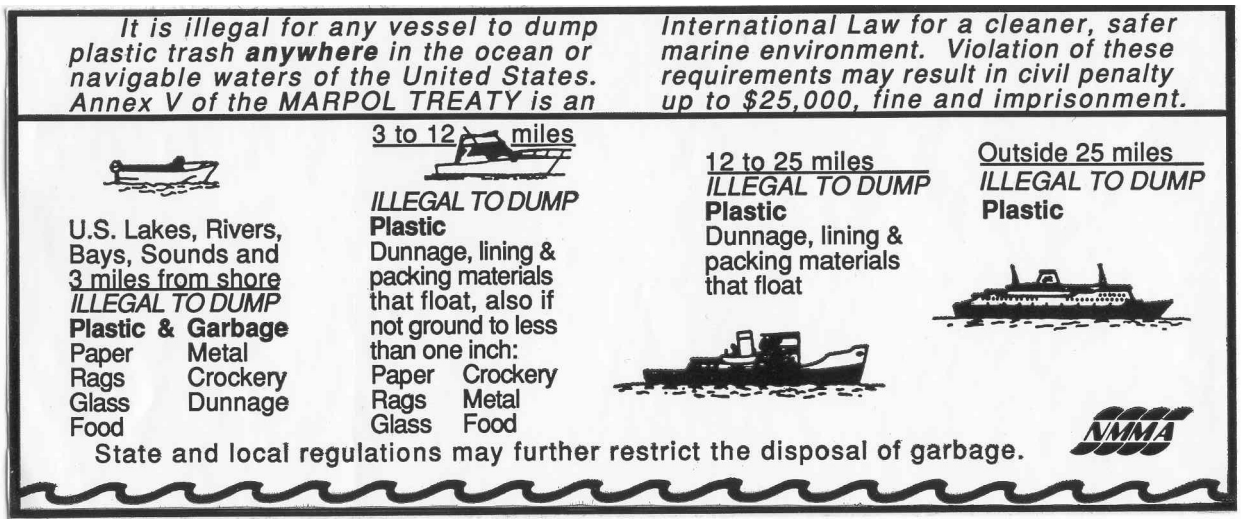


## TRAILERING

The adjustment and balance of your boat on the trailer determines how easily your boat may be transported. The tongue weight on the hitch ball should be 5-10% of the total weight of your boat, motor and trailer. Tail-heavy loads cause swaying while trailering. The rollers and/or bunkers of your trailer should be adjusted so that the weight is distributed evenly across the stern and forward throughout the keel sections. Your dealer can help adjust your trailer properly.

Practice maneuvering the trailer; the trailer always backs in the opposite direction of the vehicle. To maneuver the trailer, turn the steering wheel in the direction you want the trailer to go. Familiarize yourself with this manual and all aspects of your boat prior to initial launch. At the launch site, go through a pre-launch checklist. The list should be suited to your specific needs.

Trailering and relative information can be found on page 105 in *Sportfish, Cruisers, Yachts Owner's Manual.*

## PREDEPARTURE

See the checklist on page 44 in *Sportfish, Cruisers, Yachts Owner's Manual* before starting out.

## CASTING OFF AND APPROACHING THE DOCK

Unlike an automobile, the stern of your boat reacts first when turning. A turn to the right will swing the stern to the left and vice-versa. Remember that turning your boat away from an object, such as a dock, will tend to swing the stern toward that object. Reference procedures for casting off and approaching the dock starting on page 51 of *Sportfish, Cruisers, Yachts Owner's Manual.*

### ANCHORING

Some factors that determine the size and type of anchor most suitable for your boat include the size of your boat and the type of lake, sea or river bottom in your boating area. *Sportfish, Cruisers, Yachts Owner's Manual* has a list of tips concerning anchoring starting on page 56.

**NOTICE**

**It is illegal to tie your boat to navigational aids such as buoys and markers.**

**⚠ WARNING**

**Never anchor off the stern of the boat especially in strong winds or currents. The weight of the stern and flat surface to the seas can easily cause water to enter over the transom and swamp the boat.**

### TOWING

In the event of a mishap or power loss you may need to tow a boat or be towed. You should not tow a boat larger than your own. Always use safety and good judgement when towing. Never tow a boat if you are not equipped with the proper lines. Passengers should never grasp a towline. It should be secured to the boat. See page 39 in *Sportfish, Cruisers, Yachts Owner's Manual.*

Before towing a boat, make a bridle and tie it securely to the pad eyes on the transom with enough slack to clear the engines. Pad the line wherever it comes into contact with the boat to prevent chafing. Attach a tow line to the bridle so that it can slide from side to side to prevent too much pressure on a single pad eye. The tow line should then be attached to the bow eye or to a bridle on the towed boat. The tow line should be a minimum of twice the length of the towing boat, the longer the better. Do not try to run in too close when passing the towline to the other boat. Send either a light line or attach the towline to a life preserver to be pulled in. Be aware of the other boat's propeller.

The towed boat should always have someone at the wheel since the boat may swing off course. Start the tow off slowly; a steady pull at a moderate speed should be used. It is important to keep the slack out of the propeller area. Watch the action of the towing boat. If excessive slack develops in the towline and contact is obvious, turn in either direction to avoid hitting the stern.

**⚠ WARNING**

**As a precaution, passengers on both boats should stay clear of the towline; lines under stress could snap and fly in either direction causing injury.**

## SHALLOW WATER

Most boats that become grounded can be floated off with engine(s) tilted to reduce the draft at the transom. With motors tilted, try rocking the boat from side to side to break the suction of mud from the keel. Move passengers or heavy objects from the point where the boat is grounded. Do not lower or start the engine(s) until the boat is clear of the ground. Refer to page 63 in *Sportfish, Cruisers, and Yachts Owner's Manual*.

**⚠ CAUTION**

**Do not lower or start engines if the propeller is in mud or sand. Wait until the boat is refloated to avoid damage to the cooling system of your engine.**

Be mindful of water level fluctuations when boating in water with tidal changes. If you are grounded on an incoming tide, you can wait until the tide is high enough to refloat your boat. However, on an outgoing tide, quick action should be taken to refloat your boat. If this is not possible, set an anchor to keep the boat from becoming driven further aground. Set the anchor to counter the action of the wind or current. The anchor, in some cases, can also be used to pull the boat free.

Many inland areas have rocks and stumps which could crack or puncture a fiberglass hull. Be familiar with the boating area, and use caution in shallow water.

## GENERAL INFORMATION ON BOAT HANDLING

The best method of learning how to handle and obtain the best performance from your boat is to practice and experiment. After several hours of operation, you should experiment with the throttle settings to discover the setting that will be the most comfortable and economical range for your particular load conditions.

We suggest that you make a speed and RPM chart to obtain the most economical operation. Operate the boat at various speeds and check the fuel consumption. Compute the amount of operating time remaining when the fuel gauge has only one bar remaining on the display. Make a log of this type of information and have it available when using your boat. Other statistics you may want to determine could include the following:

- Minimum speed for effective steering.
- Turning radius at different speeds.
- Response to steering at low speeds.
- Accelerating and deceleration rates.
- Time and distance to bring the boat to a stop at different speeds.
- Control of the boat in close quarters.
- Time required to bring the boat on plane.

Also read the section in *Sportfish, Cruisers, Yachts Owner's Manual* beginning on page 59 for information on safe operating speed.

### TWIN AND TRIPLE ENGINE BOATS

Twin and triple engine boats are easier to maneuver than single engine crafts. However, they still require practice to ensure comfortable operation. The boat will run ahead or backward in a straight line when multiple engines are working together at the same speed. The engines also can be used to steer to port as well as starboard. Moving ahead on one engine will cause the bow to swing away from the running engine side and to move forward at the same time. Backing up with one engine will cause the bow to swing toward the running engine side and the boat to move backward. With twin engines, running one engine ahead and one engine astern will cause the boat to turn end-for-end in little more than its own length and running multiple engines in the same direction at different speeds will cause the boat to move in the direction dictated by the faster engine but its influence will be modified by the slower engine.

## COMMONLY USED NAUTICAL TERMS

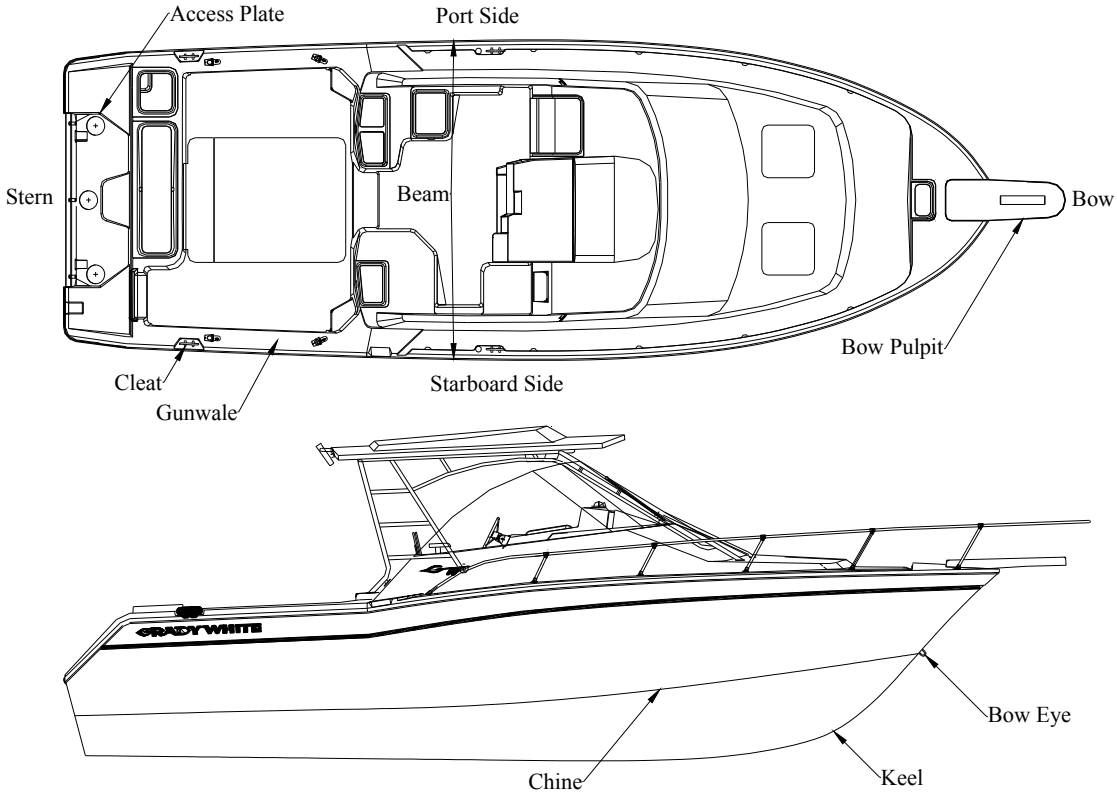


**Abeam** - a line perpendicular to a boat's keel
**Access Plate** - a removable, watertight cover that provides quick entry to enclosed areas for maintenance or visual inspection
**Aft** - toward the rear or stern of the boat
**Beam** - the greatest width of the boat
**Bilge** - the lower interior area of the hull
**Bow** - the forward section of the boat
**Bow Eye** - a U-shaped hull fitting used to attach the trailer winch to the boat
**Bulkhead** - vertical partition in the boat
**Chine** - point where the topside and bottom of the boat join
**Cleat** - deck fitting with arms or horns on which lines are fastened
**Deck** - upper structure which covers the hull
**Draft** - depth of water required to float a boat
**Fathom** - a depth measurement equal to six feet
**Freeboard** - distance measure between waterline and deck
**Gunwale (Gunnel)** - point where the deck and hull join
**Hatch** - an opening in the deck to provide access below
**Headroom** - vertical distance between the floor and over head structure or canopy ceiling
**Hull** - major component that provides a watertight platform buoyant enough to float a craft and its load
**Keel** - the major longitudinal member of a hull -the lowest external portion of the boat
**Knot** - a measurement of speed equal to nautical miles per hour
**Lee** - the side that is sheltered from the wind
**List** - a tilt or lean to one side
**Port** - a term designating the left side of the boat when facing forward
**Scupper** - holes permitting water to drain overboard from deck and cockpit
**Sheer** - curve or sweep of the deck as viewed from the side
**Starboard** - a term designating the right side of the boat when facing forward
**Stern** - rear of the boat
**Stringer** - longitudinal members fastened inside the hull to add rigidity and strength
**Wake** - the movement of water created by a moving boat
**Windward** - side facing the direction of the wind (against the wind)

# Chapter 4: Performance

## PERFORMANCE FACTORS

Maximum performance is dependent on many factors and cannot be guaranteed. These factors will vary with changing conditions. Some of these factors are listed below. Reference the trouble-shooting guide on page 75 in *Sportfish, Cruisers, Yachts Owner's Manual* for additional suggestions on adjusting performance.

### Engine Efficiency

Engines operate most efficiently when they are properly tuned, and the props are in good condition. Efficiency will decrease if normal care and maintenance are not performed. Neglecting the engines will cause power to drop and speed to decrease. In addition, expensive repairs may become necessary. Be sure to follow all instructions in the engine operation manual(s).

### Weather Conditions

Weather conditions sway engine performance. Barometric pressure and humidity affect horsepower. A change of weather could amount to a 10% loss in horsepower on some hot days.

### Load Distribution

A decrease in performance will be noted when gear, equipment, passengers, and fuel are added. This extra load will affect the performance of your boat according to the distribution of the weight. Another type of extra load that could affect performance is the accumulation of water in the bilge. Keep the bilge dry to eliminate this type problem.

### Marine Growth

Maximum performance is obtained only when your hull bottom is clean. Marine growth on the bottom of the boat will increase resistance and decrease speed. These conditions will also increase fuel consumption. Reference *"Cleaning" on page 6–1* for more information on cleaning your hull bottom.

### Trim

The outboard engine(s) are equipped with power tilt and trim mechanisms. The purpose of power tilt is to raise the engine(s) for launching, loading or trailering. Power trim may be used to adjust the boat's planing performance and running attitude. See power trim, page 62 and 83, in *Sportfish, Cruisers, Yachts Owner's Manual*.

Trim refers both to the weight distributions inside the boat and to the angle of thrust of the engine. The angle of thrust of the engine forces the bow up or down. The trim tabs on your boat also control the trim of the boat, similar to the power trim. Refer to the Trim Tabs section in Chapter 8 for additional information.

**Propeller**

The condition of your prop has a major influence on the performance of your boat. Your engine(s) should be equipped with the best size prop for normal conditions. Unusual uses or weight conditions may require special props. A damaged prop can affect your boat's top speed, cause vibrations, create a sudden drop in RPMs or even increase fuel consumption.

**CAUTION**

**Stay within the engine manufacturer's maximum and minimum RPM ranges when replacing props. This information is located in your engine manual.**

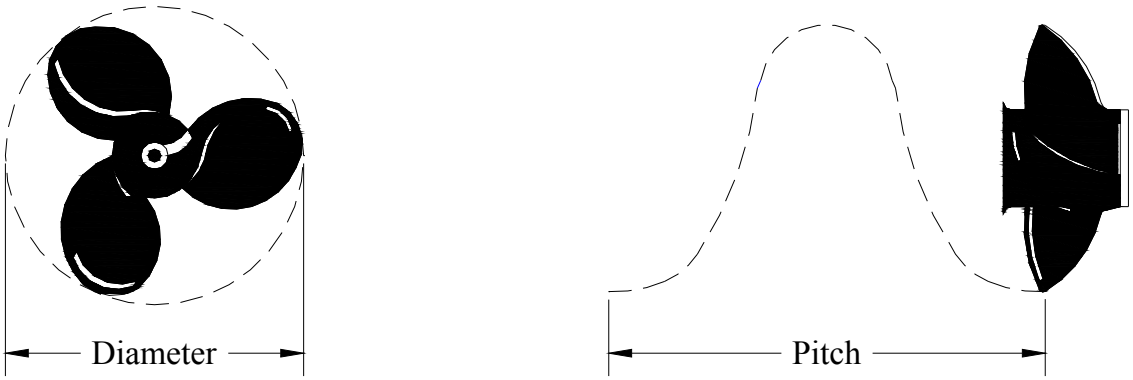


Diameter and pitch are the two basic dimensions of a propeller. Diameter is the distance across the circle made by the blade tips as the propeller rotates. Pitch is the theoretical (not accounting for slippage) forward distance the propeller would move in one revolution. An example of a propeller dimension would be 14 X 17 for a propeller having a diameter of 14” (35.6cm) and a pitch of 17” (43.8cm).

## PROPULSION SYSTEM – OUTBOARD

The engine manufacturer supplies all vital information concerning your engine(s) in the Operation and Maintenance Manual(s). Details of important engine functions such as the lubrication system, cooling system, and alarm/monitoring system are outlined in these manuals. Your familiarization with this engine reference material will result in the proper usage and service essential for safe and enduring engine performance. These manuals are included with the Owner’s Packet.

**DANGER**

**Do not inhale exhaust fumes! Exhaust contains carbon monoxide — a dangerous gas which is potentially lethal.**

**WARNING**

**Do not attempt to service any engine or drive component without being totally familiar with the safe and proper service procedures. Certain moving parts are exposed and can be dangerous.**

**⚠ CAUTION**

**Do not paint the outboard motors with anti-fouling paints designed for boat hulls. Many of these paints can cause severe damage to the engines.**

## *ENGINE WARRANTY*

A warranty registration card is included with all engine manuals. It should be completed and returned to the engine manufacturer as soon as possible.

## *STEERING*

Most outboard engines are equipped with an adjustable rudder trim tab. This trim tab should be adjusted to balance the steering at the speed which you travel most frequently. Variations in speed, boat load or engine trim will cause the steering to pull in one direction. If the boat pulls to the left, adjust the trim tab to the left and vice-versa.

- **Mechanical Steering**

  Grady-White boats that use mechanical steering are equipped with No Feedback Mechanical Steering. No feedback steering provides easier steering and increased control by offsetting the engine(s) torque.

  The mechanical steering system is designed to require a minimum amount of maintenance. However, you should periodically inspect the steering system (especially the control heads, cable ends, and attachments) for wear, rust, or corrosion and lubricate the parts when needed. If you notice a change in the “feel” of the system such as binding, looseness, noise, or sticking, immediately have a qualified marine technician perform a thorough check.

  The push rod at the end of the cable is vulnerable to corroding if it is not greased routinely. When the boat is not in use, the motor should be turned so the push rod is not exposed to the elements. If you operate in salt water areas, lubrication is extremely important, and you should make frequent inspections for corrosion.

- **Hydraulic Steering**

  Hydraulic steering systems require regular preventative maintenance for continued safe and reliable operation. The oil level in the helm pump must be maintained within acceptable operating levels. A low oil level will allow air to get into the steering system and result in unresponsive steering. The oil level should always be within 1/2 inch (1.3cm) from the base of the fill hole, located on the front top portion of the helm pump. Check the entire steering system regularly for oil leaks. Unobserved leaks over a period of time will result in unresponsive steering and possibly loss of steering. Refer to the steering manual for specific recommendations and additional maintenance requirements. Any slow or sudden change in the “feel” of your steering system indicates an immediate need for a thorough inspection. All repairs and replacements to steering systems should be made only by a qualified marine technician.

- **Tilt Steering**

  If tilt steering is available on your model, this accessory will be in conjunction with either mechanical steering or hydraulic steering depending on the model. This feature enables the operator to tilt the wheel up or down. Refer to the steering system's manual for information on oil levels with hydraulic tilt steering.

## THROTTLE/SHIFT CONTROLS

The throttle/shift controls located at the helm station control the flow of fuel to the engine. They also act as gear shift levers to control the forward and reverse thrust of the propellers.

The middle position of the throttle control is the neutral position. Move the control forward to engage the shifting mechanism which creates a forward thrust of the propeller. Advance the forward movement to increase the fuel flow to the engine and boost the forward lunge.

Move the control lever aft of the neutral position to reverse the shift mechanism and create a reverse thrust of the propeller. Increase the aft movement to increase the reverse thrust. Remember that propellers are designed for maximum forward thrust; so, reverse thrust will not be as efficient.

All controls have a neutral safety mechanism. This mechanism will not allow the engine to start when the control is in gear. You may use the neutral lock out feature on the control handle to increase the flow of fuel to the engine while remaining in the neutral position.

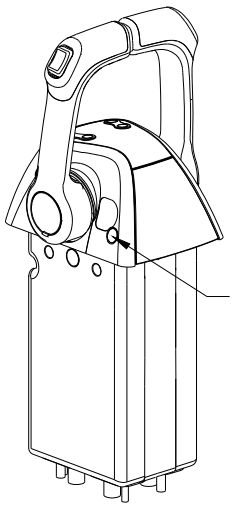


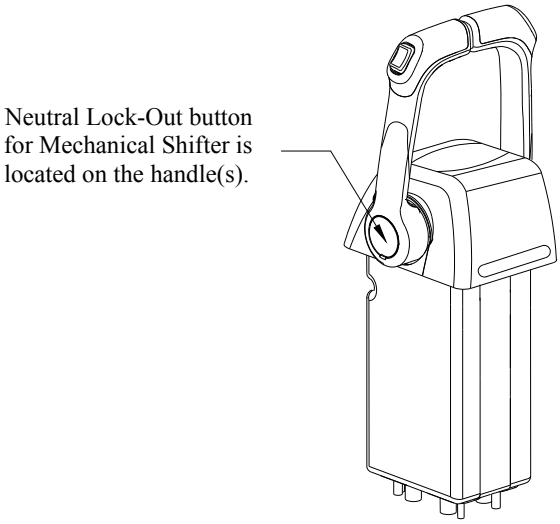

Reverse the shift mechanism to stop a boat that is moving forward. This change in direction will provide a “braking action” and slow the boat.

| ⚠ CAUTION |
| --- |
| **The braking action causes a wake which may wash over the transom and flood the boat if the vessel is moving too fast. Allow engine RPMs to decrease before shifting into reverse. Also, under certain conditions, not allowing the RPM’s to reduce before shifting to reverse may cause the engine(s) to shut down.** |

# Chapter 5: Instrumentation and Switches

## YAMAHA INSTRUMENTATION PANEL

Grady-White installs full Yamaha Command Link or Command Link Plus instrumentation on all boats. The instruments are powered by the ignition key(s) and will operate when the ignition switch(es) is in the “on” position.

## YAMAHA COMMAND LINK PLUS DISPLAY

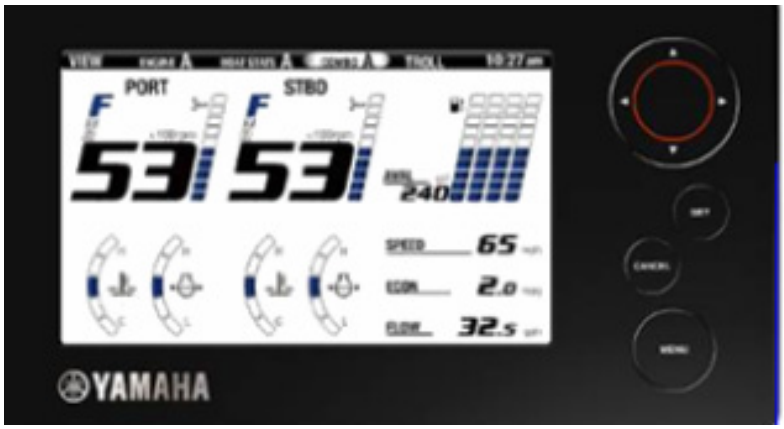


This Yamaha display provides engine and boat information listed below. The display of these functions and other graphics may be customized. Please see the Yamaha owner’s manual for detailed instructions on customizing.

- **Fuel Level**

  This feature indicates the gas tank(s) fuel level. Remember two things when reading this gauge:

  - The accuracy of your gauge varies with the attitude of your boat in the water (trim or list).
  - The fuel pickup tube inside the gas tank is not capable of withdrawing all of the fuel from the tank.

  **For these reasons, never operate your boat at extremely low fuel levels.**

- **Fuel Economy**

  This feature indicates the engine’s fuel economy in miles per gallon.

- **Fuel Consumption**

  This feature indicates the fuel consumption in gallons since the feature was last reset.

- **Fuel Flow**

  This feature indicates the fuel flow through the engine(s) in gallons per hour.

- **Low Fuel Warning Indicator**

  This feature indicates when the fuel level in the fuel tank(s) is becoming low by flashing the lowest bar.

- **Speedometer**

  This feature indicates boat speed in miles per hour, knots per hour, or nautical miles per hour. On boats with V8 engines, this gauge must be interfaced with a GPS.

- **Trip Distance Meter**

  This feature indicates the distance traveled in miles or nautical miles since the meter was last set.

- **Revolutions Per Minute (RPM)**

  This feature indicates the RPM using 100 RPM intervals. Consult your engine owner's manual for the recommended operating RPM range.

- **Trim Position**

  This feature indicates the angle of thrust of the engine. See *"Trim" on page 4–1* for adjustment recommendations.

- **Battery Voltage Indicator**

  This feature indicates the battery charge when the engine is off and indicates the alternator output when the engine is running. A reading of 12 or 13 volts is normal indicating a fully-charged battery. Readings of 11 or below indicate a weak battery which may not start the engine. A reading of 13 to 15 volts when the engine is running is normal. Readings over 15 volts may indicate regulator problems. Low or fluctuating readings may indicate loose connections or trouble in the regulator and alternator circuit.

- **Cooling Water Temperature with Warning**

  This feature indicates the temperature of the cooling water circulating through the engine and warns you when the temperature exceeds the recommended operating range indicated by your engine owner's manual. Should you receive this warning, immediately shut off your engine to prevent damage. Overheating is often caused by obstruction of your engine's intake on the lower unit. Check this water intake first if you experience trouble.

- **Hour Meter**

  This feature records the cumulative number of hours the engine has been in use.

- **Trip Hour Meter**

  This feature indicates the number of hours the engine has been in use since it was last set.

- **Oil Pressure with Warning**

This feature indicates the engine oil pressure with a warning for low oil pressure. Refer to your engine owner's manual for information regarding engine oil and oil pressure.

## YAMAHA HELM MASTER™

Helm Master™ is an optional fully integrated boat control system for Yamaha outboard-powered boats, in twin or triple engine configurations, which includes digital electronic steering, digital electronic throttle and shift, and a joystick control to facilitate docking.

On the joystick are two control selector buttons. The Joystick selector activates the joystick. The remote control must be in the neutral (center) position for this selector to be activated. The High Mode selector allows for increased engine RPM. The joystick controls the side to side and rotational movement of the vessel. The operator is the central pivot point around which the boat moves and the further one moves the joystick, the greater the thrust and speed in that direction. Return the joystick to the neutral position when finished maneuvering. Operating the throttle disengages the joystick and returns operation to the remote control box and steering wheel.

The Digital Steering Helm sends signals to the Powertrain Control Units (PCU), which control the operation of the electric pumps that pump hydraulic fluid to the steering cylinders on the engines. The Steering Control Unit (SCU) receives signals from the steering cylinder position sensors and the PCU's to carry out joystick and steering operation. One by-pass valve assembly per engine is required, and allows the hydraulic pump system to be by-passed in an emergency or for maintenance.

The Digital Remote Control has 6 control selector buttons whose activation is indicated by a green LED. The Speed Control selector is used to set the RPM's throughout the range of the engine. The Single Lever selector allows the port lever to control the shifting and speed of all engines. The Station Selector is used to select the active station on boats with two stations. The Center Engine selector allows the port lever to control the center engine only. The Trim Assist selector allows the operator to synchronize the trim angle to a given RPM so that the engine will trim to the desired angle. The Free Throttle selector allows the selected engine to be throttled up with the shift function disengaged.

The Electronic Key Switch uses a radio frequency key to power the main switch panel. Touch the key to the panel and two audible beeps indicate the system is unlocked. Press the Ignition button, then the Start/Stop button to start the engines. To engage the Y-COP security system touch the key to the panel after the engines are turned off. A single audible beep indicates the system is immobilized.

The Command Link Plus® display allows the operator to adjust and customize settings, though some settings must be adjusted by an authorized technician. The information provided here is only intended to be an overview of the system. For complete details on the operation and set-up of the Helm Master system please refer to the Yamaha owner's manual or consult your dealer.

## SWITCH PANEL

At the helm station you will find an accessory switch panel. Not all boats are equipped with the same accessories. Consult your dealer for specific information or questions on the accessories included on your boat. More detailed descriptions of switch functions are located in Chapter 8 of this manual.

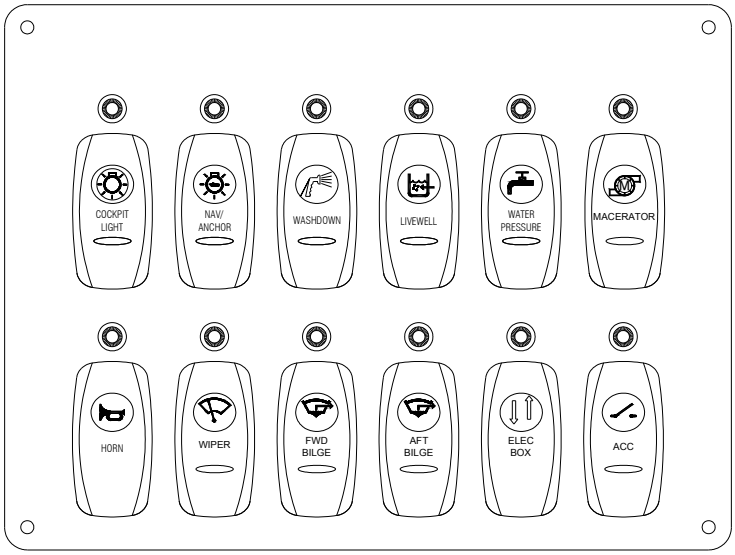


This drawing represents a generic switch panel layout. Actual panels will differ depending on the boat model and optional accessories installed during manufacturing.

# Chapter 6: Maintenance and Service

## GENERAL

The amount of maintenance required to keep your boat operating properly and to maintain the appearance is dependent on how the boat is used, amount of usage, salt or fresh water, geographic location, etc.

Your hull and deck are constructed by the “hand lay-up method” using the highest quality fiberglass mat and woven roving. This method of construction ensures a proper fiberglass-to-resin ratio and uniform thickness resulting in a much stronger boat than those constructed of “chopped glass”. This process ensures your Grady-White is the strongest, most durable fiberglass boat possible.

Keep the bilge area clean and dry. Leaks found early and corrected will less likely cause damage. Do not allow grease, grime, and dirt to build up.

While proper maintenance of your boat is a source of pride, it is also key to maintaining your boat's value. A few simple steps will keep your fiberglass Grady-White looking showroom bright for years.

## EXTERIOR FIBERGLASS FINISH

The exterior finish of your Grady-White is a thin layer of resin with a finished color pigment called gel-coat. It is used for cosmetic purposes and makes routine maintenance relatively simple. Although gel-coat has a hard smooth surface, it does contain microscopic pores that will allow surface discoloration if not kept clean.

### Maintenance

Normal exterior finish maintenance of your Grady-White is similar to the care you would give your automobile. Do not use caustic, highly alkaline cleaners or those containing ammonia. These cleaning agents may darken gel-coat. The resulting stain is a chemical reaction and can be removed with a rubbing compound or by light sanding with 400 grit followed by waxing. Also, using common household bleach (chlorine) may damage the gel-coat finish just like bleach can damage clothing with colors. Bleach impacts solid colors by causing blushing or fading and for this reason should not be used on gel-coat.

### Cleaning

The best way to prevent discoloration and soil build-up is to hose the boat with fresh water after each outing or on a regular basis. This build-up is the result of use and environmental pollutants. Clean the boat regularly with a mild household detergent and plenty of fresh water. Avoid strong detergents, citrus based cleaners, or bleaches. These products are potentially harmful to the appearance and durability of your boat’s gel-coat. Always read the label before using any cleaning product to make sure it says safe for use on fiberglass finishes. Use a sponge on smooth surfaces and the deck. A brush can be used on the nonskid areas. Use Fresh water to rinse away all grime and residue.

**Finish/Waxing**

Gel-coat will age or dull naturally due to constant exposure to the natural environment and pollutants. Discolorations are shallow in depth. Factors that will affect the rate of discoloration are: the sun, pollution, old wax accumulation, and the salt content of water. Polishing compound (fine abrasive) or rubbing compound (coarse abrasive) is recommended for use on fiberglass finishes to remove scratches and stains or restore severely weathered surfaces. These products can be applied by hand or mechanical means. The process below will help restore fiberglass finishes:

- Clean the affected area with a good detergent and fresh water.
- Remove stubborn stains or discoloration by gently wet sanding the affected areas with 600 grit "wet or dry" sandpaper. **Always sand in one direction.** Use plenty of water and sand curves in the same direction. Dry the area to make sure all the discoloration has been removed. Repeat this process if necessary.
- Buff using a polishing compound suitable for fiberglass, an electrically or pneumatically operated buffer at low speed (1750-2250 RPM), and an 8-inch (20.3cm) lamb's wool pad.

| ⚠ CAUTION |
| --- |
| **Keep buffer moving. Do not allow it to rest in one spot. Heat build up will quickly distort the surface.** |

| ⚠ CAUTION |
| --- |
| **Compounding too often or excessive compounding can wear away the gel-coat.** |

- When buffing is complete, wash away compound with clear water and dry the area.
- Once the area is clean it may be waxed. This will enhance the gloss while providing a seal to retard staining or soil accumulation.
- See a local dealer for advice on wax for your boating region. The wax film will seal the pores as well as enhance the looks of your boat. **Do not wax surfaces that may be walked on; they will become slippery.** While waxing your boat, inspect the surface for any damage. Have the damage corrected as soon as possible.

**Repairing**

Though gel-coat is a very durable material, it is susceptible to scratches, blistering, and web-like cracking (crazing) over time. It is elastic enough to withstand strong blows while flexing with the hull's movement. Gel-coat problems are cosmetic and will not affect the structural integrity of your boat.

Some gel-coat damage and imperfections such as nicks and scratches can be repaired by obtaining a color match patch kit. This kit can be purchased through your Grady-White dealer. Acetone, the most suitable cleaning agent for gel-coat, can also be acquired through your dealer. Instructions are included in the patch kit.

**⚠ WARNING**

**M.E.K.P. (Methyl ethyl ketone peroxide), gel-coat and acetone are flammable and hazardous chemicals that must be handled properly. Follow instructions carefully. After the gel-coat is catalyzed, it will soon heat up and put off fumes. When finished with catalyzed chemicals, or if they start to build up heat, submerse completely in water until cool.**

## *BOTTOM PAINT*

If your boat is left in the water for more than a few days at a time, the hull bottom below the waterline should be painted with anti-fouling paint to protect it from marine growth and barnacles that hinder performance. Since anti-fouling paint slowly dissolves, yearly inspection and cleaning of the hull bottom to prevent marine growth is advised. Repaint when necessary. To help prevent blistering, use an epoxy barrier coat to be applied in conjunction with the anti-fouling paint.

## *CANVAS*

Grady-White's canvas is made using the highest quality vinyl and latest sewing techniques. The canvas will not be completely leak proof. The seam holes in your canvas may stretch and tend to leak. However, you can correct this problem by applying Apseal® or Uniseal™ to the seams.

**Please understand that Grady-White does not warrant the fit and design of the canvas to be entirely watertight.**

**Maintenance**

To maintain your boat's top and other canvas follow these guidelines:

Fabric should be cleaned regularly to prevent the buildup of soil and soil penetration of the fabric. Simply brush off any loose dirt, hose down canvas and clean with a mild solution and warm water. Do not use petroleum-based or ammonia cleaners on canvas or clear vinyl as they will yellow. For heavily soiled fabric, remove from the frame. Soak the fabric in a solution of 1/2 cup (.12 L) of Clorox® and 1/4 cup (.06 L)of Ivory® or Lux® soap per 1 gallon (3.8 L) of warm water. Let soak until mildew and stains can be brushed out with a common kitchen brush. Rinse thoroughly with cold water until all soap is removed. Allow fabric to air dry completely. **Do not steam press or dry in an electric or gas dryer.** This will damage the canvas fabric. Water repellent was applied to your canvas during manufacturing. The repellent may have diminished after extended cleaning. Re-treatment of the fabric is recommended. Do not use wax-based products. Use a water based repellent like Apseal® or Uniseal®. Scotchguard® is effective for short-term use only.

**Snaps and Zippers**

To protect the snaps and zippers on your boat's canvas and cushions from corrosion and binding, Grady White includes a snap/zipper assist tool and a tube of lubricant (E-Z Snap®) in your owner's packet. The lubricant, manufactured by IOSSO (part number 10909), should be applied per the manufacturer's directions during the initial use of your canvas and cushions. The lubricant should be reapplied every 3 months or sooner depending on your boating environment and usage. The snap/zipper assist tool included in your owner's packet should be used whenever you remove the canvas, cushions, or operate the zippers to prevent damaging or tearing the material. Contact your dealer if you need to replace your assist tool or reorder the lubricant.

**Vinyl**

- Clean clear vinyl thoroughly with denatured alcohol and apply a protective layer of clear wax. **Do not** use paste wax, as it will turn the vinyl yellow. This process should be repeated as necessary to maintain the protective wax coating.
- Store and secure canvas before trailering.
- Dry all canvas before storing to prevent mildew.
- Remove the top, front, and side panels. **Roll** them for storage. This is necessary to prevent the front and side vinyl pieces from cracking. **Never fold these pieces!**

**Storage**

Consider the following steps when putting your bimini/vista top canvas option in the stored position:

- Fold the top and zip it into the canvas cover provided.
- Pivot the covered top into the stowed position on the foredeck. The canvas cover is equipped with a strap on each side and an eyelet in each strap. Place the eyelets over the male fasteners located on the port and starboard foredeck.
- Twist the male fastener 90 degrees to engage.

| ⚠ CAUTION |
| --- |
| **Secure the folded top when in the stowed position to prevent damage or the loss of your canvas.** |

### UPHOLSTERY

Your exterior vinyl upholstery may be cleaned with a mild solution of household detergent and fresh water. Commercial cleaners for vinyl also work well. Since the seams of your exterior upholstery are not waterproof, your upholstery should be stored in the cabin or covered when not in use. Exterior cushions will trap moisture between themselves and the gel coat. If a cushion is not removed to allow the moisture to dry, blistering of the gel coat may occur. Cockpit bolsters may be removed if you desire. These bolsters clip onto brackets mounted to the deck structure. Screws are then installed through the underside of the bolster to hold them in place. Most cabin cushions are removable and may be dry-cleaned or steam cleaned.

| ⚠ CAUTION |
| --- |
| **Do not machine wash cabin fabrics**. |

### POLYETHYLENE/PLEXIGLASS/VINYL

In the cockpit area of your boat, plexiglass and vinyl are used for trim and polyethylene is used for the toe rails and rod racks. Routine maintenance for vinyl should include regular cleaning with soapy water and the application of a surface protector at least twice per year. Polyethylene can be cleaned with products such as 409® or any spray and wipe cleaner. Plexiglass can be maintained with mild soap and water and a soft cloth.

### SCUPPERS

Grady-White boats have self-bailing cockpits meaning water on the cockpit floor drains by gravity through large aft scuppers and **not** into the bilge. The aft drains (scuppers) have an external scupper flap assembly that restricts the flow of water back into the boat. Inspect the flaps periodically to make sure they are free of debris. The scupper flaps may need periodic replacement if the rubber becomes damaged or no longer seals properly in the thru-hull.

### CAULKING/GASKET

Deck fittings, bow rails, windows, hatches, etc. have been caulked or gasketed with the highest quality material to ensure a waterproof joint with the boat. However, the working action of normal use will tend to flex the joint and eventually break down the seal between them. Periodically inspect the caulking or gaskets for leaks. Recaulk or replace the gaskets as necessary, or have your dealer do the repair.

### HARDWARE/STAINLESS STEEL RAILS

The hardware on your Grady-White is made of laboratory grade 316 stainless steel and needs regular cleaning to maintain its “less staining” properties. The key to maintaining your stainless steel is to keep it clean with a mild solution of soap and **fresh** water. Remove salt or dirt from your stainless steel on a regular basis.

## HARDWARE MOUNTING

Ensure all holes are sealed properly when mounting hardware in the boat surface. Sealing will prevent water leakage. This is crucial in fiberglass areas that have been reinforced with plywood. A hole sealed improperly allows water inside the fiberglass leading to saturation of the plywood reinforcement.

## MAINTENANCE PROCEDURE FOR ANODIZED ALUMINUM COMPONENTS

**(Lean Bars, Rod Holders, T-top and Hardtop Frames, Outriggers, Etc.)**

Due to the nature of anodized aluminum and the harsh exposure conditions of the marine environment, it is important to follow a **required maintenance procedure**. Failure to follow a preventative maintenance procedure will most likely result in aluminum pitting.

These parts must be washed periodically with a very mild soap and water solution. Grady-White recommends washing with a mild soap (such as Ivory® Liquid) after each use and every two to three weeks if stored in an outside marine environment. Strong cleaners and soaps must not be used. Never use abrasive cleaners or products that contain chlorine bleach. These products can remove the anodized coating.

Give special attention to the upper tubes of a hardtop or T-top frame. The area just below the top is shielded by the canvas or fiberglass top and does not receive the natural rinse that rainwater provides. Failure to thoroughly clean and maintain this area will allow contaminates that attack the anodized aluminum to remain on the frame.

For maximum protection, coat parts with a non-abrasive metal protector. The best protectors will displace moisture, remove contaminates, and leave a wax film protecting the anodized aluminum. Follow the application guidelines for the product you choose. A sample of one metal protector has been provided with your boat.

**METAL PROTECTORS:**

| | | |
|---|---|---|
| Boeshield T-9 | Aluma Guard | Premier Polish |
| PMS Products Inc. | Rupp Marine, Inc. | Aquatech by Nautical Choice |
| 76 Veterans Dr. | 4761 Anchor Ave. | 6726 Netherlands Drive, Suite 200 |
| Holland, MI 49423 | Port Salerno, FL 34992 | Wilmington, NC 28405 |
| 800-962-1732 | 866-477-2678 | 800-853-7760 |
| www.boeshield.com | www.ruppmarine.com | www.aquatech-marine.com |

**⚠ CAUTION**

**Do not use abrasive cleaning products, pads, steel wool or steel brushes. These products will damage the finish.**

## FUEL SYSTEM MAINTENANCE

To determine whether a fuel flow problem is in your fuel system or your engine, follow this simple method. Connect a portable tank to the engine and operate the engine. If the problem persists, the likely cause is with the engine itself. If the problem goes away, the source must be in the boats' fuel system. One component that should be inspected if a restriction occurs is the anti-siphon valve. If fuel does not flow properly through this part, it must be cleaned and/or replaced.

**⚠ WARNING**

***Do not*** remove the anti-siphon valve and replace with a regular barb. Modification or removal of the anti-siphon valve could allow a dangerous accumulation of fuel and vapors in the hull in the event of a fuel system leak.

Annually conduct a detailed inspection of fuel system components, especially those hidden from routine inspection. Replace any fittings, deteriorated hoses, clamps or connections immediately. Fuel filter/water separators should be replaced at least annually.

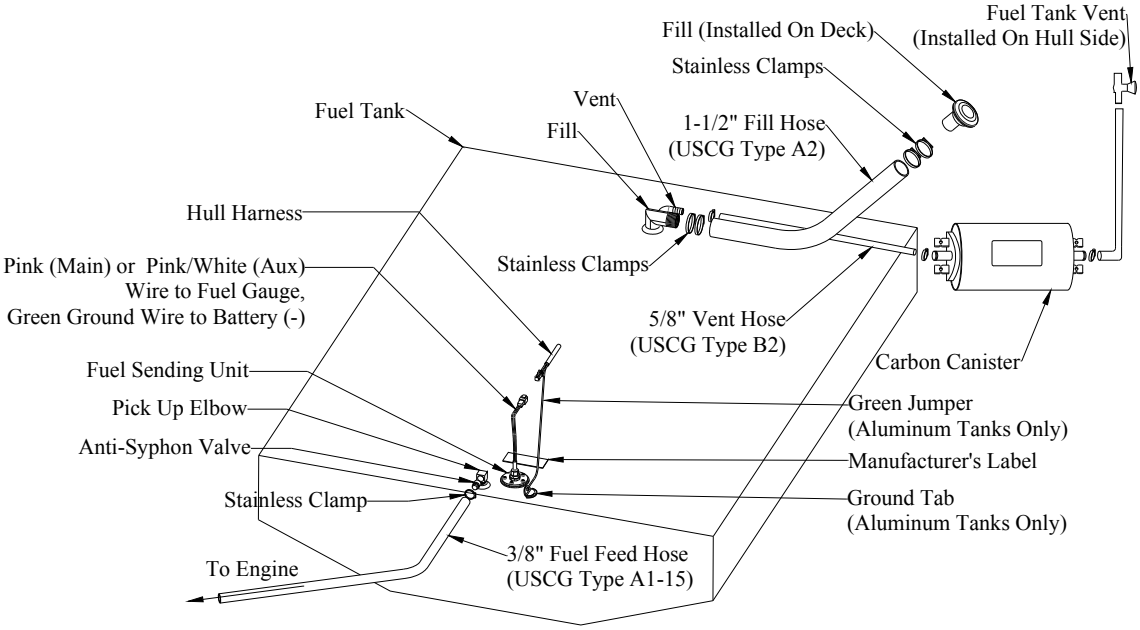

### FUEL TANK COMPARTMENT

The fuel tank compartments need to be rinsed periodically especially when used in a salt-water environment. Dirt accumulation attracts salt, creating salt crystals. Salt crystals can corrode most metal surfaces if left untreated over a period of time. To help protect your fuel tank from corrosion, rinse the compartment with **fresh** water. After rinsing, make sure all water is drained from the compartments. Remove the access plates from fuel tank lids and inspect this area for leaks or unsecured lines.

The access plates on your fuel tank lids keep the fuel compartments sealed. Over time, the opening and closing of these plates causes the o-rings to wear out. Replace these o-rings as necessary to maintain the watertight integrity of the plates.

### SHOWER SUMP

The shower in the head compartment and condensation from the air conditioning drain into a contained "sump" which is used to prevent hair, soap, scum and bacteria from accumulating in the bilge and creating odors. This sump should be cleaned regularly. The sump pump box contains a filter. Remove the filter and rinse with water to clean. The filter should always be installed when using the shower to prevent the sump pump from becoming clogged.

### BATTERIES

Proper battery power is essential to the operation of your vessel. For this reason, Grady-White has carefully chosen batteries with cranking ability and reserve capacity sufficient to meet your needs. Grady-White uses Deka brand marine batteries, either the Master 27M6 or Intimidator 8A27M, depending on the boat model. If your boat is equipped with batteries not installed at the factory, consult with the battery manufacturer for proper care and maintenance instructions and the engine manufacturer for appropriate battery specifications. Replacements batteries should always be of the same brand, model, age and size. Never mix different types of batteries.

The Marine Master 27M6 is a wet cell maintenance free battery that utilizes demineralized electrolyte and calcium alloy grids. These features reduce water loss and extend the life of the battery. However, this battery is maintenance accessible in the unlikely event a charging malfunction occurs. Wet cell batteries must be secured in a non-metallic tray to contain electrolyte spills.

The Intimidator 8A27M is an absorbed glass mat (AGM) battery that is completely spill proof and maintenance free. AGM batteries recharge faster than conventional batteries and have a higher tolerance to deep discharge for more severe applications. AGM batteries are subject to permanent damage if used with a charging system not compatible with this technology, which should be taken into consideration if using a charging system other than those installed on your boat.

Batteries contain electrolytes and acids that can be harmful and volatile. They can also present an electrical hazard. When handling or servicing batteries, exercise caution and follow these guidelines.

- Avoid contact between skin, eyes, and clothing. Protective gloves and eye wear should be worn when servicing to minimize risk.
- Batteries can produce explosive gases. Ventilate when charging. Keep sparks, flames and cigarettes away at all times.

- An insulated boot should cover battery terminals in normal use. Never allow anything metal to bridge between the positive and negative terminals which could arc or create a burn hazard.
- Keep battery terminals clean by scrubbing them with a stiff brush and a mixture of baking soda and water. Afterwards, apply a light coat of grease or corrosion preventative.
- Batteries should be secured to minimize movement when the boat is in use.

This is not a complete set of guidelines. It is your responsibility to safely maintain your batteries and avoid injury. Use good judgement and remain alert when working with batteries. In the event of an accident, immediately seek prompt medical attention.

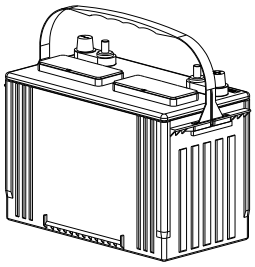

**WARNING**

**Do not allow any electrically conductive material to make contact with both the positive and negative terminals at the same time (i.e. a hand tool used when disconnecting and reconnecting battery cables). A short of this nature can cause severe burns and create dangerous sparks which could result in personal injury and/or property damage.**

**CAUTION**

**When disconnecting and reconnecting battery cables, the black cable must be connected to the negative terminal and the red cable must be connected to the positive terminal. Reversing these connections will immediately damage your system.**

**Never disconnect the battery when the engine is running. This can cause damage to the charging system. When replacing your battery, use the same brand and type as the factory installed battery. If this is not available, reference your engine Owner's Manual for recommended battery type and required performance specifications.**

### *INVERTER BATTERIES*

Some models have inverter powered accessories such as the grill or air conditioning that utilize gel cell batteries. For care of these batteries please reference Chapter 8.

### *LED LIGHTING*

LED (light emitting diode) fixtures do not have bulbs and are not serviceable. LED's have extremely long life and should not need replacement during the life of the boat. In the event of damage or malfunction, the entire light assembly should be replaced. See your Grady-White dealer for replacement LED lights.

## 290-305 330 335 336 375 & 376 DC ACCY WIRING COLOR FUSE/BREAKER

| Accessory | Wire | Amperage | Location |
|---|---|---|---|
| **Lights** | | | |
| Bow Lights | 14 ga. Gray | 10.0 | Accessory Panel |
| Cabin Lights | 16 ga. Blue/Green<br>14 ga. Blue/Green 330 | 10.0<br>20.0 (330) | AC/DC Panel |
| Cockpit Lights | 14 ga. Blue/Yellow | 10.0 | Accessory Panel |
| Livewell Light | 16 ga. Blue/Red | w/ Livewell Pump | Accessory Panel |
| Mast Light | 14 ga. Gray/Red | w/ Bow Light | Accessory Panel |
| Panel Lights | 16 ga Dark Blue | w/ Nav Lights | Accessory Panel |
| Spreader Lights | 14 ga Dark Blue/White | 10.0 | 300 & 336 Fwd light HT Fuse Block / 305, 330 & 336 accessory panel |
| **Pumps** | | | |
| Aft Bilge Pump (330 / 336 Fwd): | | | |
| Rule 1500 | 16 ga. Brown | 8.0 | Accessory Panel |
| Auto Float Switch (Aft) | 16 ga. Brown/White | 8.0 | Battery Select Box |
| Fwd Bilge Pump: | | | |
| Rule 1100 | 16 ga. Brown/Black | 6.0 | Accessory Panel |
| Auto Float Switch (Forward) | 16 ga. Brown/Red | 6.0 | Battery Select Box |
| Head Pump (Discharge) | 14 ga. Orange/Gray | 10.0 | AC/DC Panel |
| Head Pump (Vaccum) | 14 ga. Orange/Red | 10.0 | AC/DC Panel |
| Livewell Pump: Sentry 1100 GPH | 16 ga. Orange/Brown | 6.0 | Accessory Panel |
| Power Assist Pump (main) | 8 ga. Red | 50.0 | Battery Compartment |
| Power Assist Pump (ignition) | 16 ga. Purple | 5.0 | Yamaha ignition panel (in line) |
| Shower Sump Pump (Float Switch) | 16 ga. Brown/Orange | 2.5 | AC/DC Panel |
| Washdown Pump | 12 ga. Orange/Brown | 15.0 | Accessory Panel |
| Water Pressure Pump | 12 ga. Orange/Blue | 15.0 | AC/DC Panel |
| **Anchor Windlass** | | | |
| Main Positive | 6 ga. Red (300 & 305)<br>2 ga. Red (330, 336, 376) | 35.0 (300 & 305)<br>90 (330, 336, 376) | Battery Select Box |
| Positive to Switches | 14 ga. Red | 5.0 | Accessory Panel |
| Down | 14 ga. Green/Orange | N/A | N/A |
| Up | 14 ga. Blue/Orange | N/A | N/A |
| **Miscellaneous** | | | |
| 12 Volt Accessory Outlets | 10 ga. Red/Orange | 15.0 | Fuse Block |
| Amplifier | 10 ga. Red | N/A | N/A |
| Amp Remote | 16 ga. White/Purple | 11.0 | Fuse Block |
| Accessory Negatives (Branch) | Black [1] | N/A | N/A |
| Accessory Negatives (Mains) | 2, 6, or 10 ga. Black | N/A | N/A |
| Accessory Power Lead | 2, 6, 10 ga. or 2/0 Red | 50.0 | Battery Select Box |
| Blower (305,330 Head) | 16 ga. Brown/Green | 4.0 | Fuse Block |
| Blower (Bilge) | 10 ga. Brown/Yellow | 4.0<br>7.5 (376) | Generator Panel |
| Bow Thruster Positive | 4/0 Red | 250<br>400 (376) | Battery Compartment |
| CO Detector | 16 ga. Red/Black | 1.0 | Positive bus (in line) / 336 console fuse block |
| Constant 12V (Memory, High Bilge Alarm) | 16 ga. Red/Pink | 10.0 | Battery Select Box |
| Diesel Sender | 16 ga. Orange/Gray | N/A | N/A |
| High Bilge Alarm Sender Wires | 16 ga. Red/White Sender<br>16 ga. Brown/Pink Return | N/A | At panel and Float switch |
| Electronics Box Ram (305, 330 & 336) | 16 ga. White | 5.0 | Accessory Panel |
| Fuel Grounds | 16 ga. Green | N/A | N/A |
| Fuel Tank Sender (Auxiliary) | 16 ga. Pink/White | N/A | N/A |
| Fuel Tank Sender (Main) | 16 ga. Pink | N/A | N/A |
| Diesel Tank Sender | 16 ga. Pink/Blue | N/A | N/A |
| Diesel Gauge | 16 ga. Pink/Red | 5.0 | AC/DC Panel |
| Hardtop Negative (Main) | 10 ga. Black/Blue | N/A | Negative Bus |
| Hardtop Power Lead (Main) | 10 ga. Red/Blue | 40.0 | Console fuse panel 305 only |
| Horn | 12 ga. Orange/White | 10.0 | Accessory Panel |
| Hydraulic Trim Tabs | 14 ga. Orange | 20.0 | Fuse Block |
| Hydraulic Trim Tabs | 22 ga. Orange | 1.5 | Yamaha ignition panel (in line) |
| Refrigerator | 10 ga. Orange/Yellow | 15.0 | AC/DC Panel |
| Seakey Float (300 only) | 16 ga. White/Red | N/A | N/A |
| Stereo | 16 ga. Red | 10.0 | AC/DC Panel |
| TV/DVD | 10 ga. Red/Green | 10.0 | AC/DC Panel |
| Windshield Wiper (Actuator) | | | |
| 300 Port / 300 Stbd | 16 ga. Orange/Green<br>16 ga. Orange/Black | 10.0 | Accessory Panel |
| 305, 330, 336 | 16 ga. Orange/Black | 5.0 | Accessory Panel |
| Windshield Wiper (Park) | 16 ga. Orange | w/ power to switch | Accessory Panel |
| Windshield Vent(376) | 16 ga. White/Green | 10.0 | Helm Accessory Panel |

## THERMOFOIL WOOD GRAIN ACCENTS CARE & CLEANING GUIDE

**Regular Care & Cleaning (normal maintenance):**

Always use mild dish soap and a cotton cloth or non-abrasive sponge for cleaning purposes.

A 50/50 mixture of water and Simple Green is acceptable too.

**Removal of stains (includes makeup, ball-point ink, and other stubborn stains):**

1. Use a damp cotton cloth or non-abrasive sponge with a 50/50 mix of water and Simple Green.
2. Scrub lightly until the stains have been removed.
3. If stain remains, apply a product such as standard Fantastik or standard Formula 409. Lightly wipe for 10 to 20 strokes. If not successful apply 70% Isopropyl Alcohol to a cloth or sponge and lay it on top of the stain for 30 minutes.
4. After 30 minutes, remove and wipe. If stain persists, repeat alcohol application until stain is removed.

**⚠ CAUTION**

**DO NOT USE THE FOLLOWING ON THERMOFOIL MATERIAL:**

- Any abrasive cleaner
- Most solvent based cleaners and harsh chemicals such as acetone, bleach, sink & toilet bowl cleaners
- Any cleaner in combination with a brush
- Cleaners containing ammonia
- Baking soda

**Use of the above cleaners can prematurely age or permanently damage the Thermofoil material, voiding the warranty on this product.**

# Chapter 7: Winterization and Storage

## GENERAL

Boats stored during the winter or for an extended period of time require some routine maintenance. The boat and its systems should be checked for maintenance and repairs prior to and during the storage process. Arrange repairs during the storage period to reduce downtime during your boating season.

Avoid costly damage and delay when launching your boat by having it stored and winterized properly. This information is presented as a general guide; the actual storage should be performed by a professional and qualified dealership. See page 71, in *Sportfish, Cruisers, Yachts Owner's Manual* for a checklist on winterizing and storage.

## BOAT STORAGE

Grady-White boats are equipped with stern eyes and a bow eye. These eyes are for anchoring and trailering purposes, and should be inspected regularly to insure structural integrity.

| ⚠ WARNING |
| --- |
| **Boats over 30' should not be lifted for storage using the bow and stern eyes. Use slings for lifting.** |

Slings must be used for lifting your Grady-White to prevent damage to the boat. To avoid personal injury and property damage, it is advised to take extra precautions when lifting or moving the boat for storage.

While transporting a boat by a lift or fork lift, the structure should remain as close to ground level as possible. If slings are necessary for lifting or transporting, they should be in proper condition and tied together to prevent any movement (separating or slipping) which could cause damage to the boat. If fork lifts are used to move the boat, the forks should be padded, contoured to match the hull bottom, and in a secure location under the hull in alignment with the stringers. The forks should be long enough to prevent the boat from rocking forward and aft causing it to become unbalanced. Always verify the fork lift's capacity to ensure it is sufficient for the weight of the boat. Other conditions that should be considered before hauling, transporting, or storing your boat include overhead lines, ground conditions (frozen or soft), and storm conditions that may arise.

When storing your boat on the trailer, raise and block the trailer axle to prevent tire deterioration. This is an excellent time to lubricate and pack the wheel bearings per the manufacturer's instructions.

Make sure the keel, chines and transom are fully supported. Indoor storage is beneficial particularly if your climate produces freezing weather. The storage unit should not be airtight, but should be ventilated. Ventilation is extremely important both around and through the boat.

For outdoor storage, a canvas cover should be used to prevent “sweating”. One method is to build a frame over the boat to support the canvas. It should be a few inches wider than the boat so the canvas will clear the rails and allow passage of air. The cover should be fastened securely so that winds cannot remove it or cause it to chafe the boat. A poor covering job will eventually cost more than the price of a well-made cover.

**⚠ WARNING**

**Boats covered with plastic shrink wrap during storage must leave the fuel vent fitting outside of the enclosure to prevent the trapping of dangerous fumes.**

## CLEANING AND LUBRICATING THE BOAT

Clean and wax your boat before storage. If you store your boat in the water, there may be a layer of growth on the bottom. As it dries, this debris will harden. Clean, scrub and scrape the bottom promptly when the boat is removed from the water. Remove all marine growth and other foreign matter from the hull. Clean the inside of hull openings, thru-hull fittings and scupper drains. Inspect the hull for damage. Avoid harsh cleaners, citrus solutions and bleaches; these could have harmful effects on your boat’s gel-coat and metal components.

Check cleats and rails for corrosion and tightness. Clean stainless steel as directed under *“Hardware/Stainless Steel Rails” on page 6–5*. Use a quality metal preservative like T-9® on metal surfaces to prevent salt water damage. Check for loose silicone, hinges and unseated gaskets. Replace or tighten where necessary. Heavy seas pounding and twisting the hull can cause leaks in your windows, doors and hatches. Check hinges for corrosion. Lubricate hinges as necessary.

## DRAINING AND WATER SYSTEM

If the boat is stored out of water, remove the garboard drain plug to keep the bilge dry. Store your boat with the bow elevated for drainage.

Drain all water tanks, hoses, filters and pumps to prevent freeze damage. The freshwater system may be drained by running any faucet or shower until the tank is empty. When empty, turn the water pump off to prevent damage. Remove the filter on the freshwater pump inlet, remove any water and reinstall. Residual water will not damage the tank. If equipped with a water heater, the water heater must be drained individually after emptying the water tank. Drain the water heater by opening the drain faucet on the water heater. The water from the water heater will drain into the bilge. If desired, the freshwater system may have a non-toxic antifreeze for potable water systems added. To drain other systems, close seacocks and run the pumps until the lines are dry. Open the seacocks after lines are dry if the boat is stored out of the water. Draining will help prevent water stagnation in warmer climates.

## HEAD SYSTEM

Empty toilet and holding tank making sure all water is cleared. Reference Owner’s Packet for manufacturer’s information on winterization. Water should be removed from deck pump-out hoses.

Drain portable heads. Remember to drain the upper and lower tanks. Water should be removed from deck pump-out lines.

### BATTERIES

Fully charge the batteries before storing. A weak battery loses its charge more rapidly than a strong battery. Coat the battery terminals with grease to prevent corrosion.

### ENGINES

See your engine Operator's Manual regarding the winterizing procedures. Follow instructions carefully, and your engine will withstand severe weather conditions. Change all filters. Check hoses and clamps. If you have developed any vibrations during the season, look for loose engine bolts, bent shafts or bent propellers.

### FUEL SYSTEM

The fuel systems should be winterized by following the fuel system maintenance and fuel tank compartment instructions in the maintenance and service section. Tanks should be kept filled when the boat is not in use to reduce the accumulation of moisture and condensation. Add stabilizer to fuel that won't be used in 60-90 days. Use fuel stabilizer specifically designed for alcohol blended fuel if using E10 gasoline.

### STORAGE CHECKLIST

In addition to winterization guidelines the following checklist can be used as a guide for storing your boat. Additional details should be added as needed for your personal application.

- Remove all loose items and personal effects.
- Remove any detachable and valuable equipment such as electronics. Store all electronics inside. Your compass should be covered for the winter. Ultraviolet rays from the sun will cloud the compass and make it difficult to read.
- Winterize all equipment as directed in the manufacturer's manuals.
- Store cushions indoors to prevent mildew.
- Clean the exterior and interior of the boat. Remove all grease, oil, salt spray, etc.
- Remove garbage. Clean storage areas, fish boxes, and livewells. Prop fishbox lids open.
- Lubricate hinges, valves, the backs of electrical panels, and other surfaces that will rust.
- Check underwater items. Hardware should be in good condition and tight.
- Inspect electrical systems and have any repairs performed.

### GETTING BOAT OUT AFTER STORAGE

Before placing your boat in the water for the boating season, have the hull bottom sanded and reapply anti-fouling bottom paint if necessary. Leave as much equipment and personal effects as possible off the boat until after launch and final check.

## PRIOR TO LAUNCHING

Start your own personalized list of items to check and perform prior to placing your boat in the water. The following list will give you some ideas and suggestions:

- Check all gear and replace if necessary.
- Check thru hull fittings for cleanliness, damage, and tightness.
- Check prop installation and tightness.
- Clean battery terminal posts with a wire brush or bronze wool. Apply a light coating of grease to posts to prevent corrosion.
- Check all wire connections for contact corrosion and tightness.
- Check hull seacock ball valves for easy operation and for condition of hose.
- Check operation of bilge pumps in manual and automatic modes.
- Check shower sump pump (if installed).
- Check operation of all electrical circuits.
- Check the hoses on the freshwater system, and close all valves, fill freshwater system and check for leaks.
- Perform maintenance on engines according to the manufacturer's manuals prior to returning them to service.
- Check all engine and steering control cables and linkage for operation. Lubricate cables and linkage as necessary.
- Check safety equipment including flares, fire extinguisher and first aid kits. Replace items as necessary.

## AFTER LAUNCHING

- With the boat in the water, check all sources of possible leaks stem to stern.
- Thoroughly check the fuel system including lines, fittings, connections, valves, and filters for leaks.
- Connect to shore power (if installed). Check all electrical equipment, lights, water heater, air conditioning system, battery charger operation, etc.
- Check operation of toilet (reference manufacturer's manual).
- Test run engines and generator (if installed) as directed in manufacturer's manual.

# Chapter 8: Freedom 335

## Specifications

| | |
|---|---|
| Beam-amidship | 11’ 7” (3.5 m) |
| Bridge Clearance | 9’ 8” (2.9 m) |
| Centerline Length | 33’ 6” (10.2 m) |
| Keel To Top Of Windshield Bar | 9’ 11” (3.0 m) |
| Freshwater Capacity | 44 Gallons (167 L) |
| Fuel Capacity - Main | 293 Gallons (1109 L) |
| Hull Draft | 25” (64 cm) |
| Engine Shaft Length | Dual - 25” (64 cm) |
| Transom Width | 10’ 6” (3.2 m) |
| Dry Weight | 11,900 Lbs (5398 kg) |
| Steering Type | Hydraulic Tilt |
| Steering Hose Length | Helm to Pump – 9’ (2.7m) |
| | Pump to Tee – 9’ (2.7m) |
| | Helm to Tee – 18’ (5.5 m) |
| | Tee to Port – 6’ (1.8 m) |
| | Tee to Stbd – 4’ (1.2 m) |
| Maximum Outboard HP | 700 HP (522 kW) |

## Optional Features

### ACCESSORIES

- Air Conditioning - Helm 16,000 BTU
- Air Conditioning - Accommodation space 8,000 BTU
- Bow thruster
- Cockpit side door - starboard
- Flat screen TV w/DVD player & audio video inputs
- Generator - 4kW diesel - 12 gallon fuel capacity
- Grill - 1300W (requires generator or inverter option to power away from dock)
- Hardtop rod holders - (4) leg mounted
- International AC electrical conversion - 220V 50Hz
- Microwave
- Outrigger kit- 15 ft (4.6 m) radial hardtop mounted
- Painted hull
- Cockpit Cooler- 166 qt. (157 L) aft fish box with digitally controlled thermostat and overboard drain
- Seating - aft wraparound lounge seat (replaces fold away bench seat)
- Sirius satellite radio system

- Ski pylon
- Sun platform insert cushions
- Underwater lighting
- Water heater - 6 gallon (22.7L) - Includes hot water cockpit shower
- Yamaha Helm Master™ control system

### CANVAS

(available in ivory)

- Bow cover with zipper
- Hardtop drop curtain
- Clear2Sea™ front and side curtains
- Aft tonneau cover
- Wet bar cover
- Sureshade® retractable hardtop shade with Sunbrella® canvas

# Operation Of Standard Features

## ACCESSORY SWITCH PANEL

At the helm you will find an accessory switch panel. Not all boats are equipped with the same accessories. Consult your dealer for specific information or questions on the accessories included on your boat.

- **Aft and Forward Bilge**
  These two-way switches serve as manual switches for each bilge pump. These switches operate independently of each other. Two circuit breakers located above each switch provide over-current protection at the panel for each bilge pump circuit.
- **Cockpit Light**
  The cockpit lights provide illumination in the cockpit area. This switch also activates the lighted cup holders. A circuit breaker located above this switch provides over-current protection for this circuit.
- **Cockpit Shade (optional)**
  This switch operates the cockpit shade. Depress the bottom of the switch to extend the cockpit shade and the top of the switch to retract the cockpit shade.
- **Freshwater**
  This switch activates the pressurized freshwater system. A circuit breaker located above this switch provides over-current protection for this circuit.
- **Hardtop Lights**
  This momentary switch activates the multi-colored recessed downlights. Depressing the switch one time turns the lights on. Subsequent pressing of the switch will cycle the lights through the colors. Press and hold for 3 seconds to turn lights off.
  Note: Depressing/cycling the switch too quickly may cause the light colors to be unsynchronized. To reset the light colors, turn the lights off by pressing and holding for 3 seconds.
- **Horn**
  The horn meets the requirements of the USCG for sounding devices. A circuit breaker located above this switch provides over-current protection for this circuit.
- **Livewell (optional)**
  This switch activates the livewell pump and light. A circuit breaker located above this switch provides over-current protection for this circuit.
- **Navigational/Anchor Lights**
  This three-position switch (NAV-OFF-ANC) changes the lighting configurations to running or anchor lights. A circuit breaker located above this switch provides over-current protection for this circuit.
- **Raw Water**
  This switch activates the raw water washdown system. A circuit breaker located above this switch provides over-current protection for this circuit.

- **Spreader Lights**
  This switch activates the hardtop spreader lights. A circuit breaker located above this switch provides over-current protection for this circuit.
- **Underwater Lights (optional)**
  This switch activates the underwater lights. A circuit breaker located above this switch provides over-current protection for this circuit.
- **Windlass**
  This switch operates the anchor windlass. Depress the top of the switch to raise the windlass and the bottom of the switch to lower the windlass.
- **Wiper**
  This switch powers the windshield wiper. A circuit breaker located above this switch provides over-current protection for this circuit.
- **Accessory**
  Switches and breakers labeled "ACC" are blank. They may be used for non-factory installed accessories. Circuit breakers located above these switches provide over-current protection for these circuits. See *"290-305 330 335 336 375 & 376 DC Accy Wiring Color Fuse/Breaker" on page 6–10* for recommended breaker amperages. Switch labels are available from your dealer for non-factory installed options.

| NOTICE |
| --- |
| **Use anti-corrosion spray on the back of panels and on exposed wires to prevent the rust or corrosion that could lead to an electrical system failure.** |

## Other Switches

- **Trim/Tilt**
  The trim/tilt switch is located on the throttle control. Trim changes the angle of thrust of the engine (reference *"Trim" on page 4–1*). Tilt raises the drive unit for trailering.
- **Trim Tab**
  These switches control the hydraulic trim tabs used for adjusting the attitude of the boat. See *"Trim Tabs" on page 8–12* for more details.

## AC/DC PANEL

The Freedom 335 AC/DC panel is located on the aft wall of the port console. AC and DC powered switches are noted below.

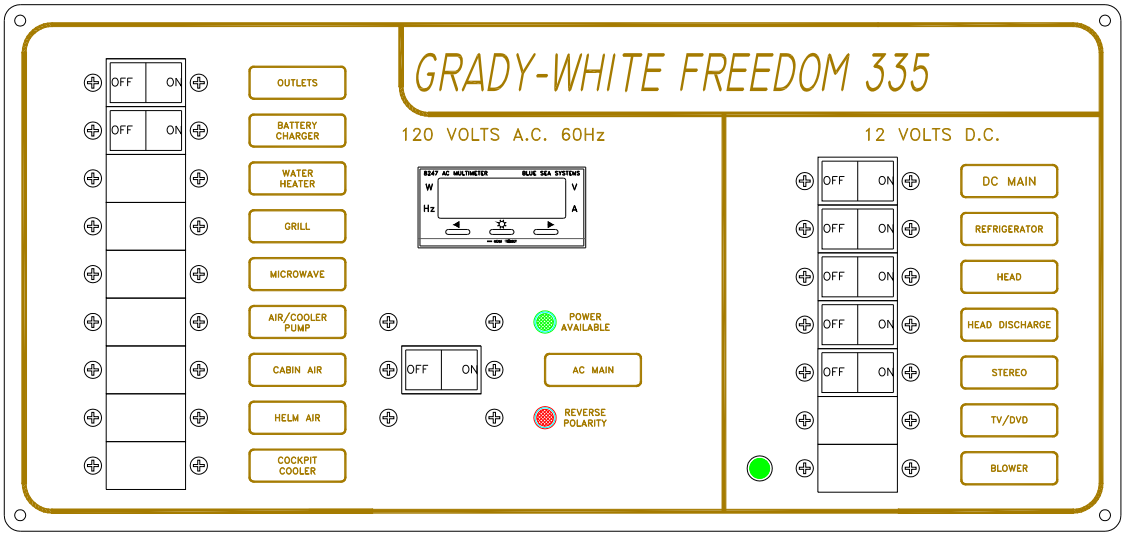


**⚠ CAUTION**

**120V AC presents a high voltage shock hazard. All power supplies should be turned off and disconnected before accessing the wiring behind the AC panel. Service to the AC wiring should be performed by a qualified marine electrician.**

## AC Powered Accessory Switches

The shore power cord must be connected to shore and the circuit breaker, located under the aft starboard gunwale, must be in the "on" position to allow these auxiliary switches to operate. See *"120 V AC Electrical Diagram" on page 8–47* and *"AC Accessory Wiring" on page 8–38* for a wiring schematic and layout.

- **AC Main**

  The main power switch, must be in the "on" position to distribute power to the following accessory switches.

- **Air Conditioner (optional)**

  This load group 2 switch provides power to the cabin air conditioner control panel. Operation of the unit is affected only by adjustments made on the unit's control panel. See *"Air Conditioner Layout" on page 8–35* for more details on the air conditioner.

  * 15A for international boats outside North America, **35A for international boats outside North America

- **Air/Cooler Pump (optional)**

  This switch provides power to the air/cooler pump relay which in turn powers the air/cooler pump for the optional air conditioner and optional cockpit cooler. This switch must be turned on to operate the air conditioner, but is not required for the cockpit cooler— the cockpit cooler will cool more efficiently with the air/cooler pump working. Also, the air conditioner seacock located in the aft rigging compartment must be open.

- **Battery Charger**
  This switch operates the on-board battery charger.
- **Cockpit Cooler (optional)**
  This switch provides power to the control for the refrigeration unit used to cool the optional cockpit cooler. Refer to *"Cockpit Cooler Layout" on page 8–23* for more detail concerning the operation of the cockpit cooler.
- **Grill (optional)**
  This switch furnishes power to the grill located in the starboard wetbar.
- **Helm Air (optional)**
  This load group 2 switch supplies power to the helm air conditioner control panel. Operation of the unit is affected only by adjustments made on the unit's control panel. See *"Air Conditioner" on page 8–15* for more details on the helm air conditioner.
- **Microwave (optional)**
  This switch provides current to a receptacle dedicated for the microwave.
- **Outlets**
  This switch provides current to the GFCI outlets.
- **Water Heater (optional)**
  This switch activates the six-gallon (22.7 L) water heater. Ensure the water heater is not empty before engaging this switch.

| ⚠ CAUTION |
|---|
| **To avoid heating element failure, do not turn on the hot water heater unless it is filled with water.** |

## DC Powered Accessory Switches

- **DC Main**
  The main power switch must be in the "on" position to operate the following switches and all DC accessories not specifically wired to a switch.
- **Blower**
  This switch activates the bilge blower in the aft bilge rigging area.
- **Head Discharge**
  This switch provides power to the discharge pump control for the head system.
- **Head**
  This switch provides power to the vacuum pump integrated within the head system. Without engaging this switch, the marine head will not operate. It also activates the holding tank level monitor.
- **Stereo**
  This switch provides power to the stereo.
- **TV/DVD**
  This switch provides power to the 12 volt fuse block which powers the TV and DVD player. See *"TV/DVD" on page 8–19* for more information concerning the TV and DVD player.

### AUXILIARY FUSE PANEL

There are two auxiliary fuse panels located in the starboard console storage area. The larger of the two provides a source of power for factory installed accessories such as the lights and horn. The smaller fuse panel is provided for electronics and other non-factory installed accessories. The fuse blocks receive power from the positive bus bar. Your model utilizes the automotive type fuse.

### ACCESSORY OUTLET - 12 VOLT

The four 12-volt outlets on your 335 provide easily accessible power supplies for accessories such as cellular phones and spotlights. One outlet is located in the port helm, one in the starboard helm, and one in each bow deckwing insert.

| NOTICE |
| --- |
| **These outlets cannot be used with a cigarette lighter.** |

### AFT RIGGING COMPARTMENT

One rigging compartment is located aft of the fuel tank compartment. This enclosure is used for rigging ignition protected accessories and batteries, and provides access to the rigging components for the engines.

### ANCHOR WINDLASS

The anchor windlass includes a stainless steel bow roller. Please refer to the anchor windlass owner’s manual for proper operation of the windlass.

### BATTERY CHARGER

The battery charger is located in the leanbar rigging compartment near the batteries. The generator must be running or the shore power must be connected for the charger to work. To activate the charger, turn the AC panel breaker switch to the "on" position. The charger has a built-in isolator that senses the charging needs of all the batteries and distributes charge accordingly. At the point that all batteries are nearly fully restored, the charger will automatically reduce the current being sent to the batteries to a maintenance level. See the charger Operation Manual in your Owner's packet for further information.

### BATTERY SELECT SWITCH

The 335 Freedom is equipped with four batteries and two select switches. The batteries are wired into two banks, each bank consisting of two batteries paralled together. An outboard engine should be connected to each battery select switch. Either engine may be started with either battery bank by selecting position “1” or position “2” on the select switches. In normal use, select position “1” on the starboard switch and position “2” on the port switch so that both battery banks will be charged simultaneously by the engine alternators when the engines are running. The “1 + 2” position should only be selected in emergency situations when neither battery bank alone will start the engines. Should this event occur, the switches should be returned to the normal settings after starting the engines. The DC accessories on the boat will always be controlled by the starboard switch. See *“Battery Wiring with Select Switches” on page 8–27* or for a diagram.

| ⚠ CAUTION |
|---|
| ***Never* turn the battery select switch to the “Off” position with the engine running as this could damage the charging system.** |

### BILGE PUMPS/FLOAT SWITCHES

Your boat is equipped with automatic float switches on the bilge pumps. This will enable the bilge pump to come on automatically if a significant amount of water accumulates in the bilge. The switches are wired directly to the batteries via breakers in the battery select switch box and should be inspected frequently to ensure proper operation. The float switches function independently of the battery select switches and can activate the bilge pumps with the battery select switches in the “off” position. The pumps are also equipped with switches at the helm. When the helm switches are in the “manual” position, the pumps will run continuously. The pump should not be left in the “manual” mode unless someone is monitoring the system and can turn the pump off when the bilge is dry.

| ⚠ CAUTION |
|---|
| **To prevent damage to the bilge pump, do not run it dry for a prolonged period of time.** |

### BILGE PUMP LOCATIONS

Your boat has two bilge pumps. One is located in the aft bilge near the transom and can be accessed through the port center access plate in the motorwell. The second is in the rigging area under the helm storage compartment. This pump can be reached through the lift out board under the floor of this compartment.

### BOW TABLE

The bow table is adjustable and converts to a port lounge seat when not in use. It is intended for lightweight objects only such as drinks and food items.

| ⚠ CAUTION |
|---|
| **Max load = 20 pounds (9.2 kg). Table collapse resulting in injury may occur if maxload is exceeded.** |

### COCKPIT SHOWER

To operate the cockpit shower, the freshwater switch located on the accessory switch panel must be in the “on” position. Open the cover and pull the shower wand out from the recessed deck fitting. Depress the button on the back of the wand to spray water. To reinstall the shower wand, gently feed the hose down through the deck and close the cover on the deck fitting.

### COMPASS

The compass is located at the helm in direct view of the operator when navigating the boat. Follow the instructions provided in your Owners Packet to make compensation adjustments.

### FRESHWATER SYSTEM

The 335 comes with a pressurized freshwater system. The freshwater pump is activated by the freshwater switch on the acessory switch panel and supplies water from the 44 gallon (166.6 L) water tank to the freshwater components on board. The freshwater pump and optional 6 gallon water heater can be accessed through the access panel on the aft wall of the helm storage compartment. The water tank is located aft, next to the transom. See *“Freshwater System” on page 8–28* for a layout diagram.

### FRESHWATER WASHDOWN

To operate the freshwater washdown, depress the freshwater switch on the accessory switch panel. This system will now be pressurized at the freshwater washdown outlet. A hose with a spray nozzle attached may be used intermittently without turning the switch off in the same fashion as a garden hose with a nozzle. The freshwater pump has an internal pressurization switch that will maintain water pressure as needed until the switch is turned off at the switch panel.

### HARDTOP

Do not use the hardtop for storing heavy or large items such as a raft. The structure of the frame and top is designed with antennas, radar, and outriggers. The additional weight caused by larger items such as a raft may cause damage to the frame structure.

### LIVEWELL - RAW WATER

To operate the livewell, open the seacock with the livewell I.D. tag located in the port aft bilge. The livewell pump is screwed directly into this seacock. The livewell switch at the helm should be in the "on" position. Water will enter through a plenum along the side of the livewell and be distributed through a series of holes arranged vertically along the plenum. The water will rise until it reaches the top overflow drain on the plenum at which point it will drain overboard..

| NOTICE |
| --- |
| **If the seacock is left open and the pump is not on, the boat’s forward motion through the water will gradually fill the box. To prevent this inadvertent filling, close the seacock when the livewell option is not in use.** |
| **Under certain conditions placing the outboard engine in reverse will ventilate the water under the boat and create an air lock in the livewell pump. To prevent an air lock, turn the livewell “Off” prior to any high RPM or constant reverse operation. If the livewell pump becomes air locked, correct this situation by turning the pump off for 20 seconds.** |

### MAIN CIRCUIT BREAKER

There is a 50 amp circuit breaker located in the battery select switch box near the transom door. This is the main breaker protecting the wiring supplying power to the positive bus bar at the helm. If this breaker is tripped, the yellow trip lever will be horizontal. Sliding the trip lever back to a vertical position will reset.

### OUTLETS

Current is provided to the outlets by the generator or shore power. The outlet is a ground fault protected outlet and will operate any standard household appliance (i.e. blender, coffee maker). However, the total combined amperage, in addition to other AC accessories, must not overload the boat's generator output. One outlet is located in the port helm, one in the starboard helm, and one in each bow deckwing insert.

### PORT HELM TABLE

The port helm table is hinged so that it may be folded down to increase storage space. It is intended for lightweight objects only such as drinks and food items.

### POWER ASSIST HYDRAULIC STEERING

The engine ignition switches must be on for this system to function. The power assist hydraulic pump is activated simply by turning the steering wheel. The hydraulic pump senses the motion of the hydraulic fluid from the helm and pumps fluid in the cylinders at the engine accordingly. The power assist pump is installed in the starboard console rigging compartment. Over-current protection is provided by a 50A fuse located on the positive terminal of battery bank #2. This system is compatible with multiple steering stations and the use of an autopilot. Refer to the owner’s manual in your owner’s packet for more information.

### RAW WATER WASHDOWN

To operate the raw water washdown, open the seacock with the washdown I.D. tag located in the aft bilge. Depress the raw water switch on the accessory switch panel. This system will now be pressurized at the raw water washdown outlet. A hose with a spray nozzle attached may be used intermittently without turning the switch off in the same fashion as a home garden hose with a nozzle. The raw water pump has an internal pressurization switch that will maintain water pressure as needed until the switch is turned off at the switch panel. The pump is mounted in the aft rigging compartment beneath the aft rigging lid. See *“Livewell/Raw Water Washdown Layout” on page 8–30* for a system diagram.

### REFRIGERATOR

The refrigerator switch on the DC panel and the thermostat knob inside the refrigerator must be on for the refrigerator/freezer to operate. The manually operated thermostat is located inside on the right upper rear wall. The thermostat is turned clockwise to reduce the temperature and counterclockwise to increase the temperature.

To turn off the refrigerator, turn the switch on the DC panel off, or rotate the thermostat counterclockwise until it reaches “0” position. Note that there will be resistance at this on/off position and the knob will need to be pushed in while turning to “0”.

### SEACOCKS

Ball valve seacocks are installed on the thru hulls for the livewell, washdown, air/cooler pumps, generator systems and some head features. It is necessary for the seacocks to be in the "open" position for operation. The "open" position is identified by the orientation of the handle. If the handle is in line or parallel to the body of the valve, the seacock is in the "open" position. If the handle is perpendicular to the body of the valve, the seacock is in the "closed" position. For seacocks with remote arms installed, the "open" position can be obtained by pulling up on the remote arm attached to the seacock handles. Pushing down on the remote arm closes the seacock.

**⚠ CAUTION**

**All seacocks should be in the "closed" position if not in use or if the boat is unattended to prevent the taking on of water if a plumbing component fails.**

### SLIDING COCKPIT SEAT

The cockpit seat includes an aft facing sliding seat bottom. This allows for the seat to be adjusted to provide more seating area for passengers when extended or maximize cockpit space when retracted. The switch for this seat is located in the port helm panel.

**⚠ CAUTION**

**To prevent damage to the deck floor, do not activate the sliding seat bottom while a passenger is sitting on the seat.**

### SHOWER SUMP

The shower sump is located under the floor of the helm storage compartment and can be accessed by removing the cover board. The sump pump gets electrical power from the helm accessory fuse block so as long as the battery select switches are on, the pump will operate when needed. The sump collects and discharges drainage from the head shower and condensation from the air conditioner. The shower sump contains a filter which should always be installed when using the shower to prevent the sump pump from becoming clogged. Similar to a bilge pump, the sump pump is activated automatically by a float switch to discharge the collected water overboard via a thru hull. See *"Cleaning" on page 6–1* for maintenance information.

### STEREO

The stereo is a marine AM/FM receiver with an integrated iPod®/iPhone dock and a Bluetooth® adapter. A Sirius satellite radio tuner and antenna may be installed in lieu of the Bluetooth® adapter upon request. It is located in the port console. It has eight speakers, two located directly below in the cabinet, two in the forward deck wing inserts, two in the hardtop, and two in the cockpit. The unit can be remotely operated with three touch pads mounted at the helm station, the port panel, and the port forward deck insert. Refer to the stereo's operation and maintenance manual in your owner's packet for specific instructions on using this unit. See *"Stereo System Layout" on page 8–33* for a drawing showing the stereo system.

## TRIM TABS

Trim tabs are electrically and hydraulically operated. The trim tab system includes a hydraulic pump, a switch with an integrated indicator, and an auto-retract feature. The switch controls the pump which lowers and raises the trim tabs. The indicator keeps you constantly aware of the trim tab's position. The auto-retract feature automatically raises the tabs every time the ignition switch is turned off.

Trim tabs are used to regulate the attitude of the boat while moving. They are operated by a two-rocker switch panel and will aid in trimming the boat fore and aft for a smoother ride. Trim tabs can improve the ride of your boat by adjusting where the water is hitting the keel line. In a slight chop, the waves may be hitting the keel of your boat around the helm area causing an uncomfortable ride. By adjusting the trim tabs and lowering the bow, the waves will hit the keel at a more forward point and soften the ride. Experimenting with trim tabs in various sea conditions will help you determine the best positions for your boat under different load conditions.

Trim tabs are also useful in correcting a port or starboard running list. If the boat is listing to the port side, press the starboard trim tab switch toward "bow down". Press the port trim tab switch toward "bow down" to correct a starboard list. This will tend to lower the bow by pulling the higher side to a level position. If your bow is already in a low position and your tabs are down, you may correct a listing condition by pressing the trim tab switch toward "bow up". This will cause the low side to rise and level the boat. The running angle will also gradually improve.

Trim tabs in the extreme "bow up" positions will have no effect on the boat's ride. Trim tabs in the extreme "bow down" position will cause the boat to come on plane with minimum bow rise. Unless you are operating at low speeds or with considerable cockpit weight you will likely want to raise the tabs slightly when underway to avoid "plowing" water. With the tabs in the "bow down" position, you will be able to maintain a plane at the least possible RPMs.

### Trim Tab Pump Location

The trim tab pump is located in the starboard console rigging area. The hydraulic fluid levels should be checked on an annual basis or anytime there is evidence of a leak.

## VACUFLUSH® HEAD SYSTEM

The VacuFlush® Head consists of a vitreous china bowl, vacuum pump with tank, and a holding tank. To operate the head, the head and freshwater switches must be in the "on" position. The head switch is located on the DC panel while the freshwater switch is on the accessory switch panel. This provides power to the vacuum pump, and pressurizes the freshwater system. Since this unit uses freshwater, it is not necessary to open a seacock prior to use. Instructions on the operation of your VacuFlush® head are as follows:

Verify that the switches on the DC panel and accessory switch panel are in the "on" position.

To add water prior to flushing, raise the flush lever on the bowl until the desired level is reached.

To flush, depress the flush lever swiftly until contents clear the bowl. A sharp popping noise is normal when the vacuum seal is broken and flushing begins. Be sure to hold the lever down for 3 seconds.

| NOTICE |
| --- |
| **Do not dispose of sanitary napkins or other non-dissolving items in the toilet. Also, do not attempt to flush facial tissue, paper towels, or large quantities of toilet paper.** |

Located on the aft head wall is a monitor which displays the fill level of the holding tank When the tank is filled, it can be discharged overboard or emptied through the deck pump-out fitting. Following are instructions on both operations:

**Overboard Discharge**

1. Open the discharge seacock located in the bilge area under the helm storage compartment with the "DISCH" I.D. tag. This seacock must be open prior to discharge to prevent damage to the discharge pump.
2. Supply power to the pump using the switch at the DC panel labeled Holding Tank Discharge.
3. Engage the pump using the key switch in the holding tank monitor on the aft head wall. Turn the switch to the "manual" position. The discharge pump will run until the panel indicates the tank is empty.
4. Close the discharge seacock when the tank is empty.

| ⚠ CAUTION |
| --- |
| **Overboard discharge seacock must be secured in the closed position in accordance with the laws in your boating area.** |

**Deck Pump-out**

1. Remove the cap from the deck pump-out fitting located on the port deck gunwale midships.
2. Connect a vacuum hose from a pump-out station to the deck fitting and run until the tank is empty. Replace the cap on the deck pump-out fitting.

See *"VacuFlush® Head Layout" on page 8–32* for a layout diagram.

### WET BAR WITH SLIDING SEAT

The wet bar on your 335 Freedom includes a sliding power seat. The switch for this seat is located in the starboard deckwing insert. The wet bar also features a sink, freshwater pull out shower, storage tray, storage drawer, and trash compartment.

### WINDSHIELD WASHER SOLENOID

The wiper switch located at the helm controls your windshield washer. Water may be sprayed on the windshield by pressing the wiper switch to the down position with the Freshwater System pressurized. To pressurize, locate the freshwater switch on the accessory switch panel, and place it in the “on” position. Both wipers will operate and both washers will spray until the wiper switch is turned off.

# Operation Of Optional Features

## AIR CONDITIONER

The air conditioning system operates on AC current only, therefore, the generator or shore power must be in use. The switch on the AC/DC panel activates the unit's control pad located inside the door of the port console. The thermostatic control is similar to household units. Vents are located on the forward galley cabinet and in the aft berth. Also, the shower sump pump should be switched on to remove any condensation. Refer to the Operation and Maintenance manual in your Owner's Packet for specific instructions on using the unit.

**NOTICE**

**If your boat is removed from the water, leaving the seacock open will drain the water in the air conditioning system. This may cause an airlock in the air conditioner water pump in subsequent operation. To prevent this drainage, close the air conditioner seacock. If the boat is being winterized, leave the seacock open so the water can drain. Then, remove any remaining water by blowing pressurized air through the system. See the Operation and Maintenance Manual included in your Owner's Packet for additional winterizing information.**

**⚠ CAUTION**

**To avoid restriction due to debris in the raw water intake strainer, turn off the air conditioner and close the intake seacock while docking or operating in shallow water.**

## BOW THRUSTER

(not necessary w/Yamaha Helm Master™ control option)

The bow thruster aids in maneuvering your boat. The outboard engines can control the direction of the stern while the bow thruster moves the bow. Use the joystick control located at the helm to control the thruster. The emergency shut-off switch provides a simple method to quickly disconnect power from the thruster motor. Depress this button to disengage the thruster in the event of an emergency. Reference *"Bow Thruster Layout" on page 8–36* for a layout diagram.

**⚠ CAUTION**

**To avoid damaging the sheer pin in the bow thruster lower unit, do not engage the thruster when the propeller is not submerged. Also, do not suddenly change direction of thrust without allowing the propeller time to stop.**

## COCKPIT COOLER SYSTEM

With this option, the aft fishbox can be used as a refrigerator or a freezer. The cockpit cooler switch on the AC panel must be on to cool this box. It is not required to have the air/cooler pump switch on and the air condition seacock open to cool this box, but it is strongly recommended. The raw water moving through the system will allow the refrigeration unit to cool the box more efficiently. If you choose to turn the air/cooler pump on, ensure the air condition seacock is open. Refer to *"Cockpit Cooler Diagram" on page 8–52* for wiring detail.

The temperature of this box is determined by designating the set point temperature. The set point is set using the digital temperature switch on the cooler control panel located on the port wall of the port cabin. To establish the set point, first press set — SP text will appear on the display. Press set again, the value will appear on the display. Change the temperature set point to the desired value using the up and down arrows. Press set when the desired set point is displayed to enter this value. Press set and down simultaneously to exit programming or wait one minute and the switch will exit programming mode automatically. Please reference the owner's manual for this system included in the owner's packet for more detailed information.

## GENERATOR

The generator enables you to use AC accessories without being attached to shore power. A Fischer Panda™ model 4200, capable of producing 4200 peak watts (34 amps) and a constant 3800 watts (31.6 amps) is installed on your boat. A separate 12 gallon (45 L) diesel tank located in the aft rigging area supplies fuel to the diesel generator. The diesel fuel level may be monitored using the gauge located near the generator control panel.

### Generator Control Panel

The generator control panel is located at the bottom of the AC/DC panel. To learn more about how to operate this panel, reference the Fischer Panda owner's manual included in your owner's packet.

### Amperage Requirements

The generator provides sufficient power to operate most accessories at the same time. A list of amperage requirements for all AC accessories is provided below. Use the amp meters and volt meter on the AC panel to properly manage the load on the generator. The generator is capable of handling momentary peaks above its rated capacity. These peaks are normally related to the start-up of each accessory. In addition to the factory installed appliances, you should know the amperage requirements of any household objects you bring on board.

| | | |
|---|---|---|
| • **Microwave** | **7.1 Amps (3.6) 50Hz** | **Maximum Amps** |
| • **Hot Water Heater** | **12.5 Amps 6.3) 50Hz** | **Maximum Amps** |
| • **Air Conditioner** | **8.9 Amps (4.5) 50Hz** | **Running Amps** |
| • **Helm Air Conditioner** | **10.9 Amps (5.5) 50Hz** | **Running Amps** |
| • **Air/Cooler Pump** | **2.1 Amps (1.1) 50Hz** | **Running Amps** |
| • **Cockpit Coolers** | **6.6 Amps (3.3) 50Hz** | **Running Amps** |
| • **Grill** | **10.8 Amps (5.4) 50Hz** | **Running Amps** |
| • **Battery Charger** | **6.3 Amps (3.2) 50Hz** | **Maximum Amps** |

**⚠ CAUTION**

**Do not leave the generator seacock open while the boat is in motion and the generator is off. You can use the generator while the boat is moving. However, when the generator is shut down the intake seacock should be closed immediately. If the seacock remains open, excessive seawater may be forced into the generator cooling system causing water to back up into the exhaust manifold.**

**Carbon Monoxide Detector**

A carbon monoxide detector is included with your generator package. This monitor serves as a warning system for exposure to poisonous carbon monoxide fumes. Carbon monoxide is a colorless odorless gas produced in the exhaust of combustion engines. It can accumulate in amounts that may be hazardous or fatal. This accumulation may occur very quickly in a boat with a defective exhaust or one in which the exhaust is re-entering the boat due to wind currents, low pressure areas in the cabin, or other means of air movement. A CO monitor provides an extra measure of safety, but does not replace the need to regularly check the entire generator exhaust system including the exhaust manifold, hose and muffler condition, hose connection joint, etc. For proper operation and maintenance, refer to the literature provided by the manufacturer in the Owner's Packet.

**⚠ WARNING**

**End-of-Life (EOL)**
**The carbon monoxide detector is equipped with a 5 year EOL timer, which operates continuously and independently from a lithium battery. When the timer has run for 4 years and 11 months from the date of manufacture, the unit will signal the first EOL alarm: The green LED will turn off, the red LED will turn on and the alarm will beep every 30 seconds.**

**To temporarily reset the device to normal operation after the EOL alarm occurs, press and hold the test/silence button until both lights come on. It will be reset for 72 hours and this process can be repeated for 30 days. After 30 days the unit will continuously signal EOL and must be replaced, as it will no longer detect CO.**

## *OUTRIGGERS*

The optional outriggers spread the fishing lines being trolled from your boat and decrease the chance of entanglement.

- **Advantages**

  Advantages of outriggers include offering bait throughout a larger area behind the boat, placing bait out of the wake zone, automatic drop back following strikes (which allows for fish to completely accept bait), and a reduction in unnecessary twisting action characteristic of artificial bait.

- **Instructions**

  For installation and use, reference the sheet included in your Owner's Packet.

- **Care And Maintenance**

  Outriggers should be washed with freshwater, mild soap, and a soft cloth. Never use abrasive cleaners on outriggers.

  A periodic waxing is suggested if your outriggers are exposed to salt water. The wax will provide a protective coating and seal the pores of the metal. A non-abrasive high quality marine or automotive wax is recommended. Before storage, clean and wax the outriggers.

  During assembly, grease all threads, bolts, and tubes where one section is inserted into another. Disassemble and regrease all applicable surfaces on an annual basis.

## SHORE POWER

The shore power feature allows the use of AC equipment on board the boat. This equipment includes any permanently installed appliances such as a battery charger or water heater, or it may be a household item plugged into a receptacle. The shore power is utilized by connecting the heavy-duty cable supplied with the boat to an appropriate external power source. This cable provides power to the boat's AC inlet that is wired to the AC panel. The AC panel allows for distribution to the various appliances and outlets. See *"DC Accessory Wiring (1 of 2)" on page 8–21* for more information on component location and wiring specifics.

**⚠ CAUTION**

**Always disconnect the shore power cable if leaving the boat unattended for an extended period of time.**

### Connecting The Shore Power

1. Verify that the external power source is a 3 wire grounded system with amperage and voltage ratings compatible with the boat's AC system ratings.
2. Be sure there is sufficient cable length to allow for normal movement between the boat and the dock.
3. Turn all AC panel switches to the "off" position. Turn the circuit breaker under the port gunwale to off. Turn the circuit breaker at the dock outlet to off.
4. Connect the shore power cable at the boat inlet first.
5. Connect the shore power cable at the dock outlet and turn the dock outlet circuit breaker to "on".
6. Turn the circuit breaker under the port gunwale to the "on" position. Note: Test circuit breaker monthly by pressing the test button and then resetting.
7. Turn the shore circuit breaker on the AC panel to the "on" position.

**⚠ WARNING**

**If the reverse polarity indicator on the AC panel is activated, immediately disconnect the shore power cable, and have a qualified electrician correct the fault.**

### Disconnecting The Shore Power

1. Switch all circuit breakers at the boat's AC panel off.
2. Switch the circuit breaker under the starboard gunwale off.
3. Switch the circuit breaker off at the dock outlet.
4. Disconnect the shore power cable at the dock outlet first.
5. Disconnect the shore power cable at the boat inlet.

**NOTICE**

**Keep inlet cover closed tightly when not in use.**

## SIRIUS SATELLITE RADIO

The Sirius satellite radio includes the Sirius satellite tuner and antenna which provides access to many channels of digital entertainment. The antenna is installed in the forward bow area away from any structure that may cause signal interference. The tuner is installed inside the forward port console cabinet near the stereo. The tuner is controlled by the Sirius ready stereo installed on your boat.

You may activate your subscription to Sirius online at siriusradio.com or by calling toll-free 1-888-539-SIRIUS. If you choose to call, a Sirius operator will walk you through the initial setup process. You will need the ESN number for your tuner, a major credit card, your boat in a location where the antenna is not blocked from receiving a signal, and the Sirius tuner set on channel 184. You will find the ESN number attached to the warranty card for the tuner included in the owner's packet. You may also obtain this number using your Sirius ready stereo by following these steps:

1. Press the antennae button repeatedly until "SIRIUS XM" appears.
2. Scroll until "Channel 1" appears.
3. Write the number down and exit screen.

For more information, refer to the tuner's owner's manual and quick start guide included in your owner's packet.

## SKI PYLON

The ski pylon is designed to be removable when not in use. Be careful to properly tighten all hardware when assembling the pylon for use.

## TV/DVD

The television is a 19" (48 cm) flat screen LED unit. It is located in the port console. An A/B switch located below the TV cabinet is used to change between broadcast antenna and shore cable reception. When the switch is set to A, the TV receives a signal from the broadcast antenna. Set the switch to B when connected to shore cable. The DVD/CD player is a separate unit located beside the television. Both the TV and DVD/CD player receive power from the fuse block located behind the TV. The DVD player inlucdes an auxiliary audio/video input which allow for external devices such as gaming systems to be connected to the TV using standard RCA cables.

## WATER HEATER

The generator must be operating or the shore power connected for the water heater to function. This accessory will provide hot water to the pressurized freshwater system. Follow the Water Heater Operation and Maintenance manual provided in the Owner's Packet for instructions and care of the water heater.

| ⚠ CAUTION |
| --- |
| **To avoid heating element failure, do not turn on the water heater unless it is filled with water.** |

# Access Plate And Rigging Tube Location

| # | Description | | Qty. |
|---|---|---|---|
| A | 3" x 95" | (2.4 m) | 6 ea. |
| B | 3" x 85" | (2.2 m) | 2 ea. |
| C | 3" x 53" | (1.3 m) | 3 ea. |
| D | 3" x 40" | (1.0 m) | 5 ea. |
| E | 3" x 30" | (76 cm) | 1 ea. |
| F | 3" x 22" | (56 cm) | 4 ea. |
| G | 3" x 12" | (30 cm) | 1 ea. |
| H | 1 1/4" x 53" | (1.3 m) | 1 ea. |
| I | 1" x 96" | (2.4 m) | 1 ea. |

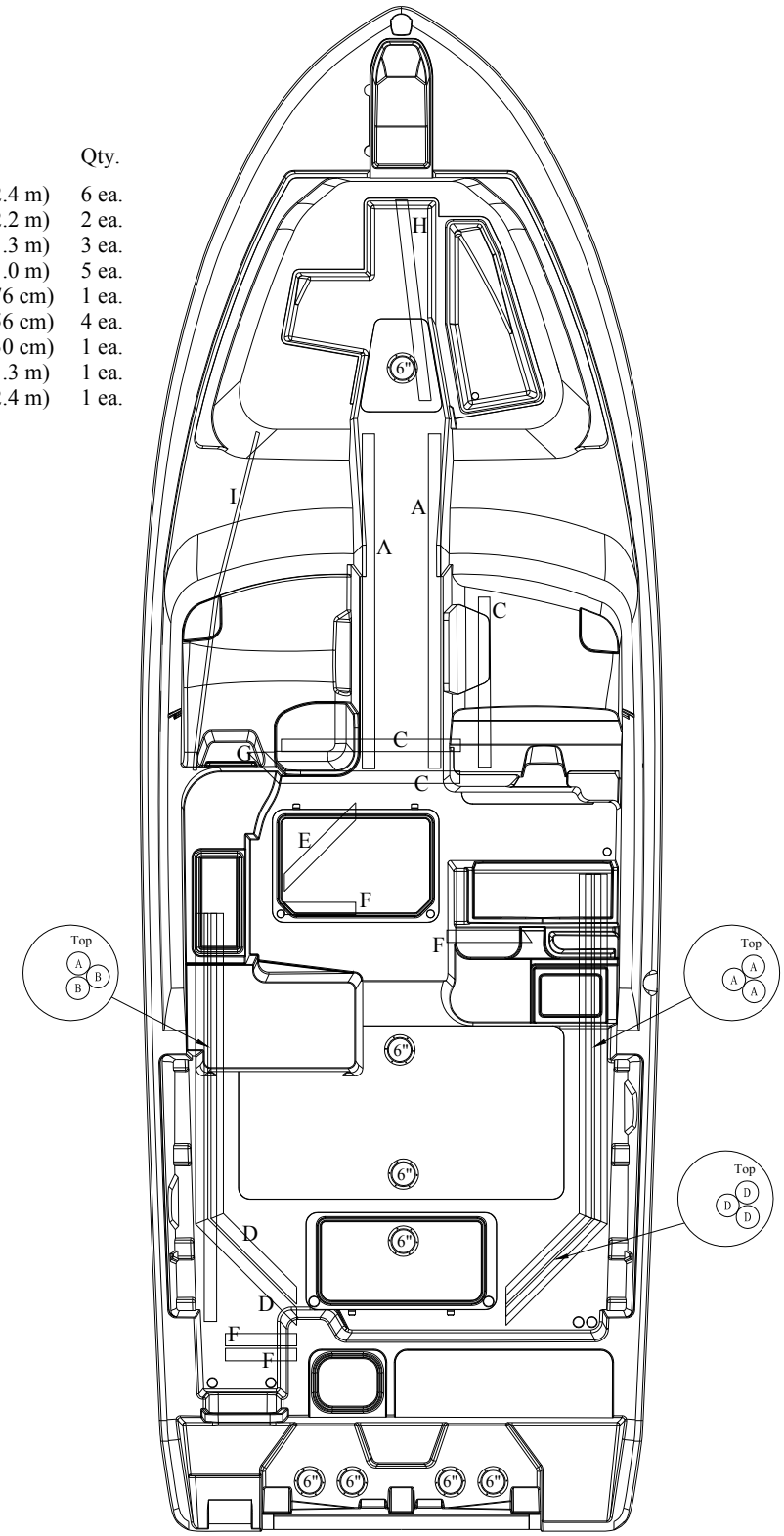

# DC Accessory Wiring (1 of 2)

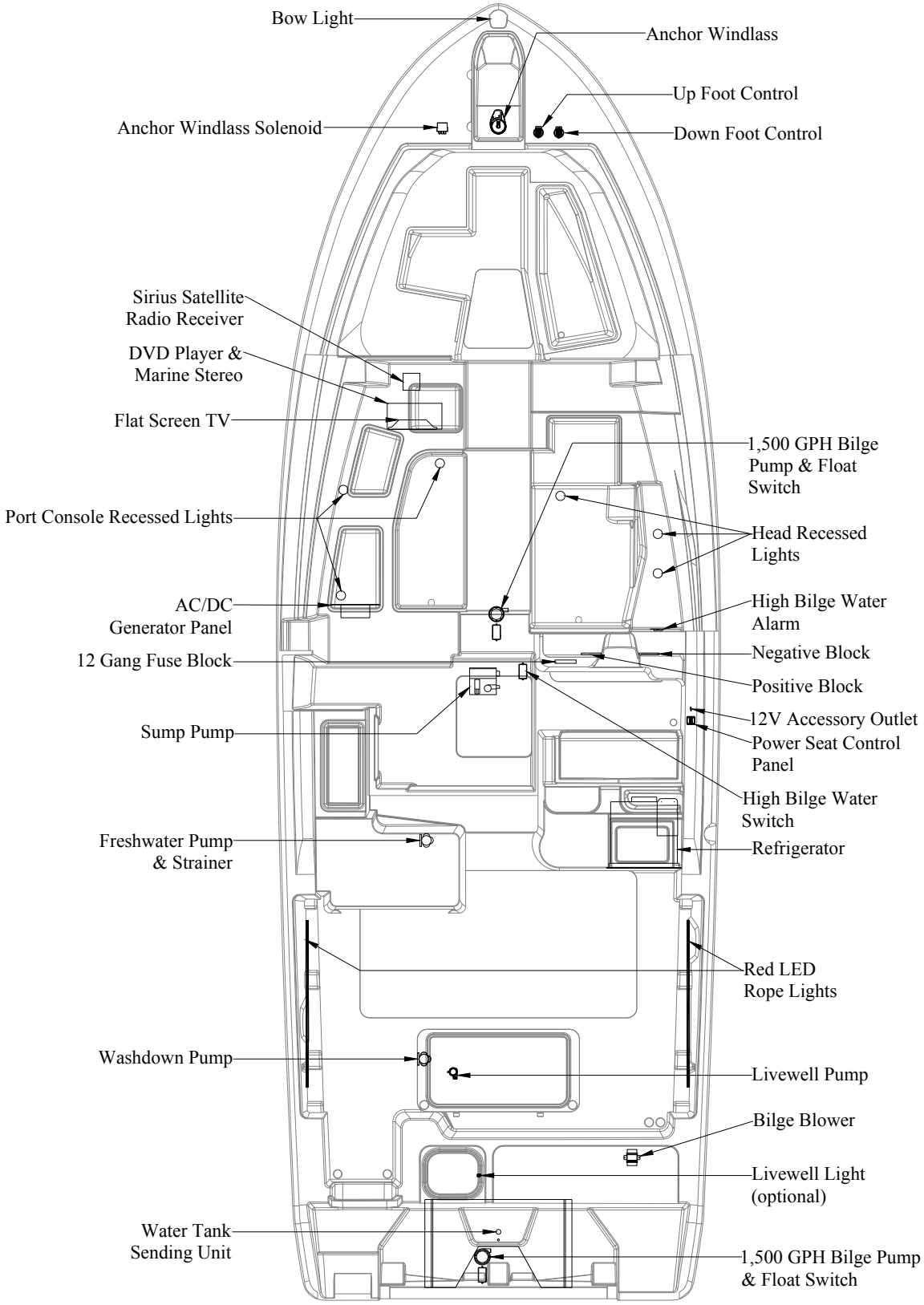

# DC Accessory Wiring (2 of 2)

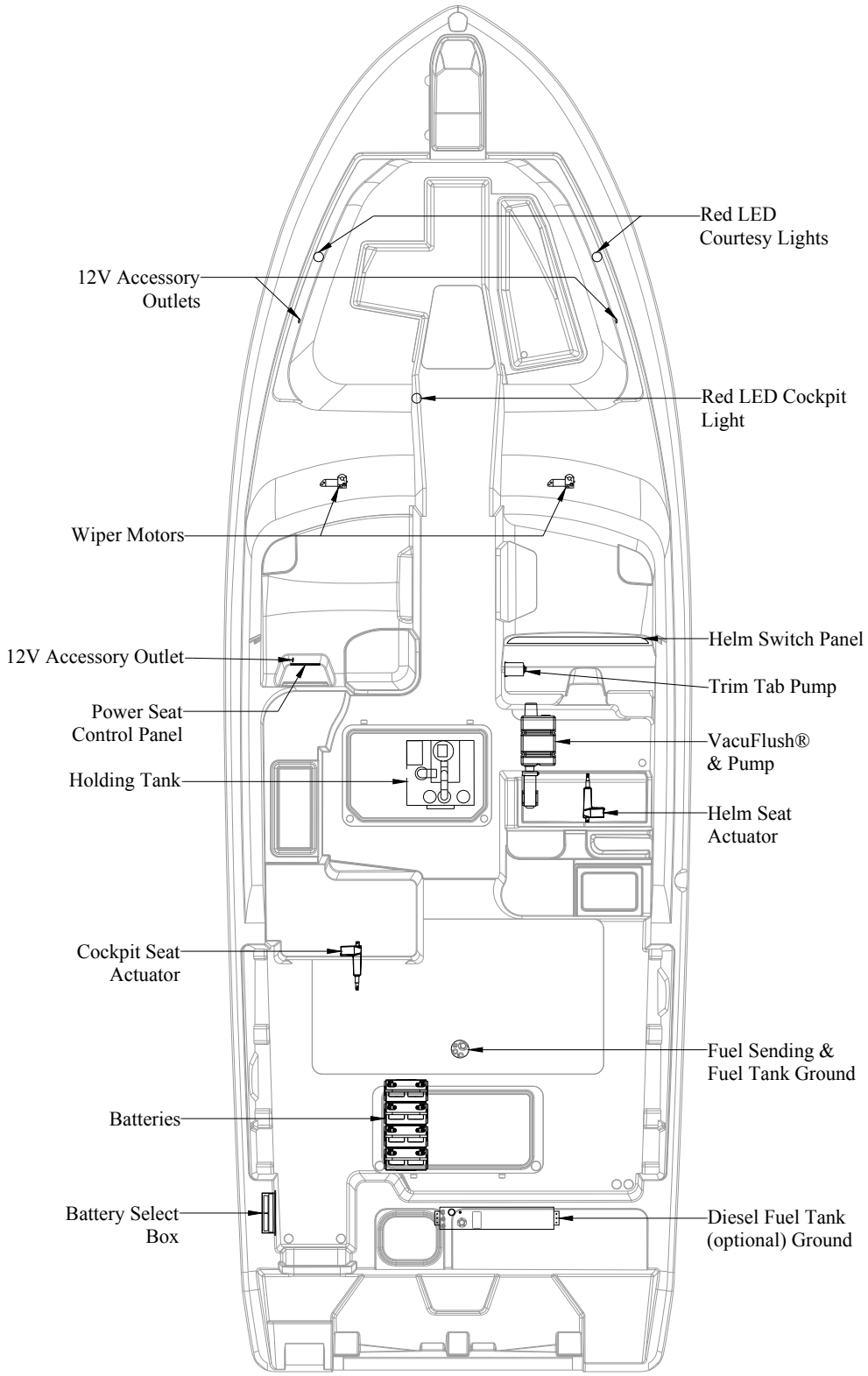

# Cockpit Cooler Layout

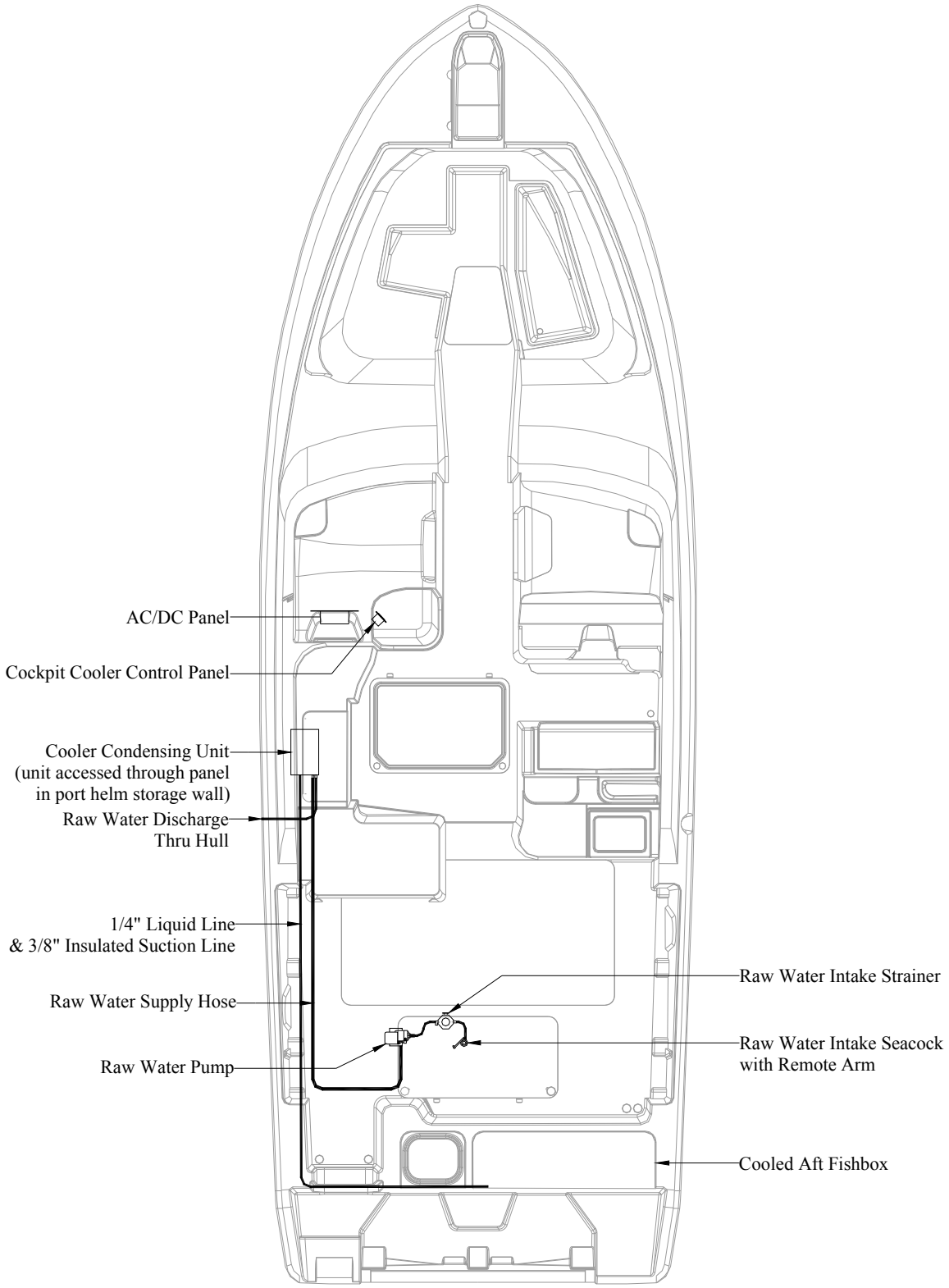

# Diesel Generator Layout

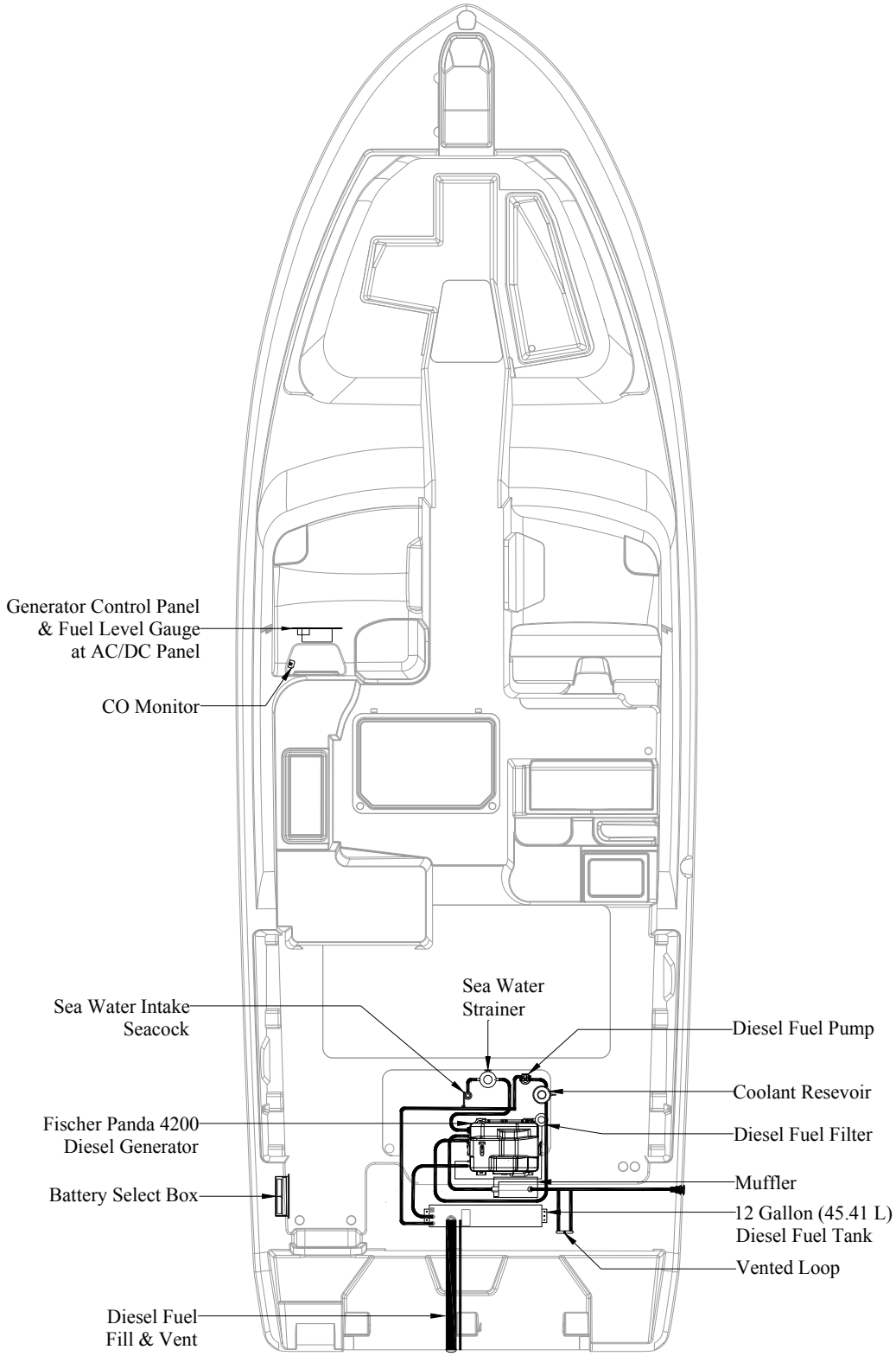

# Fuel System

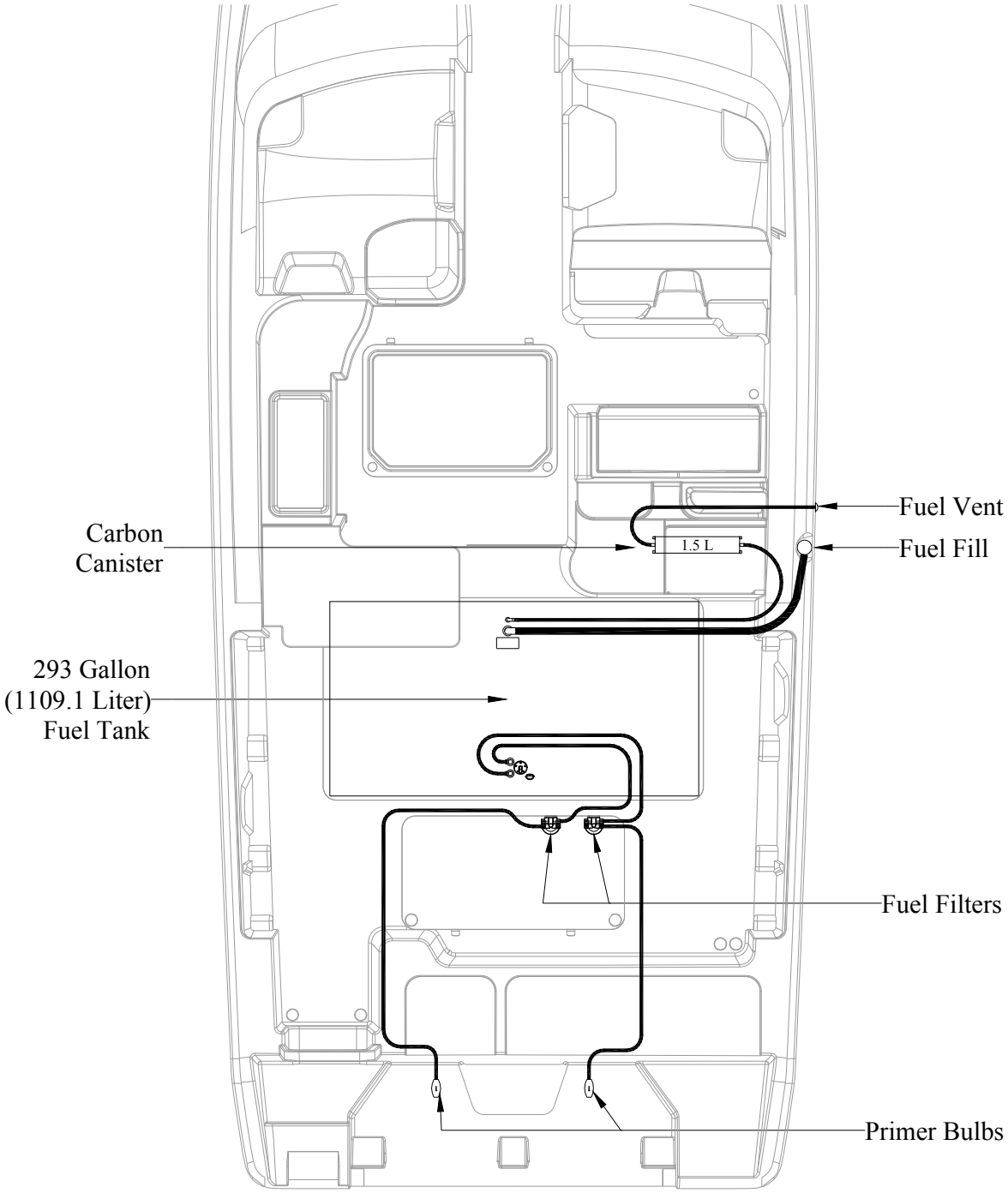
Fuel Vent
Carbon Canister
1.5 L
Fuel Fill
293 Gallon (1109.1 Liter) Fuel Tank
Fuel Filters
Primer Bulbs

# Typical Outboard Switch Panel Wiring

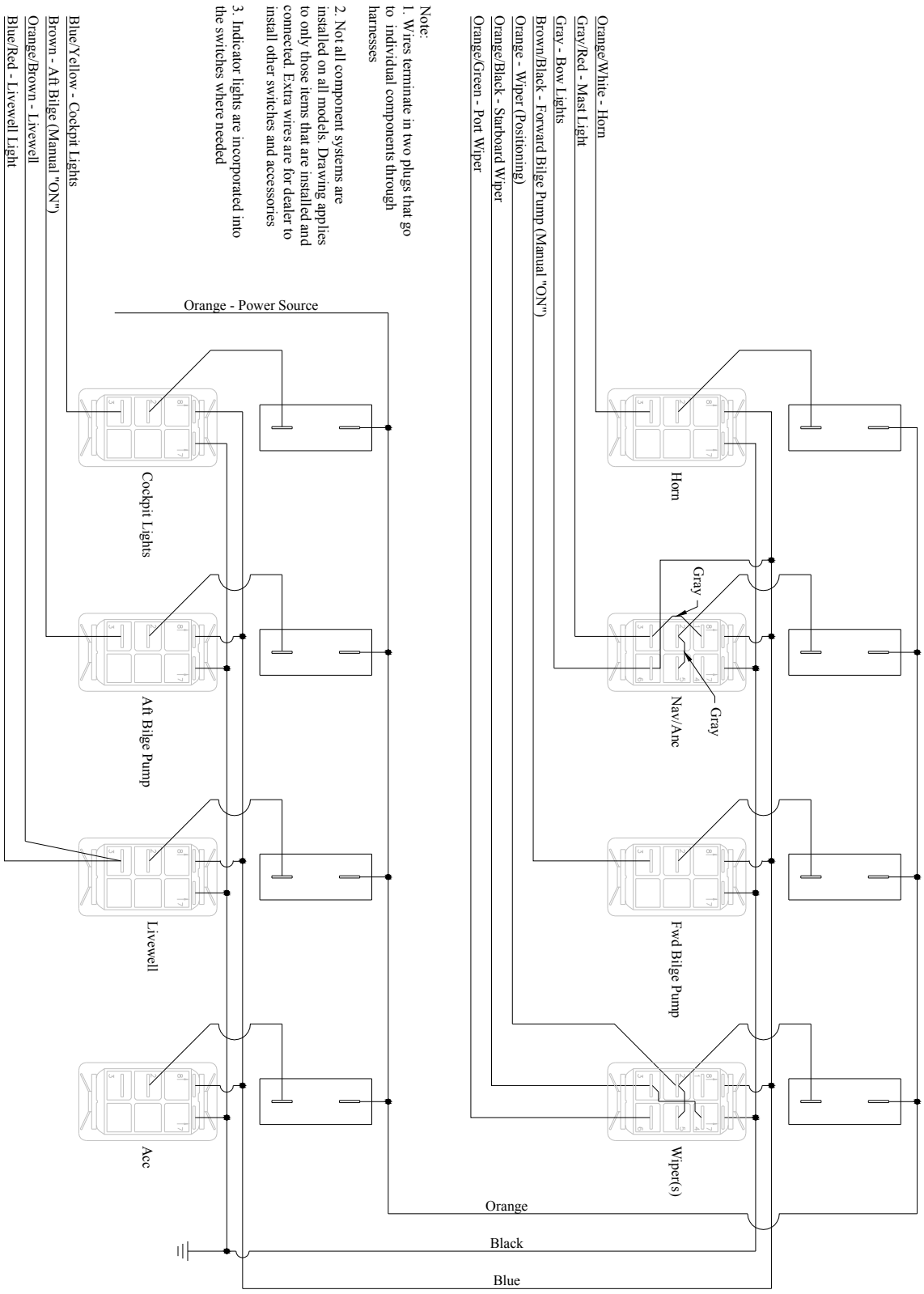

# Battery Wiring with Select Switches

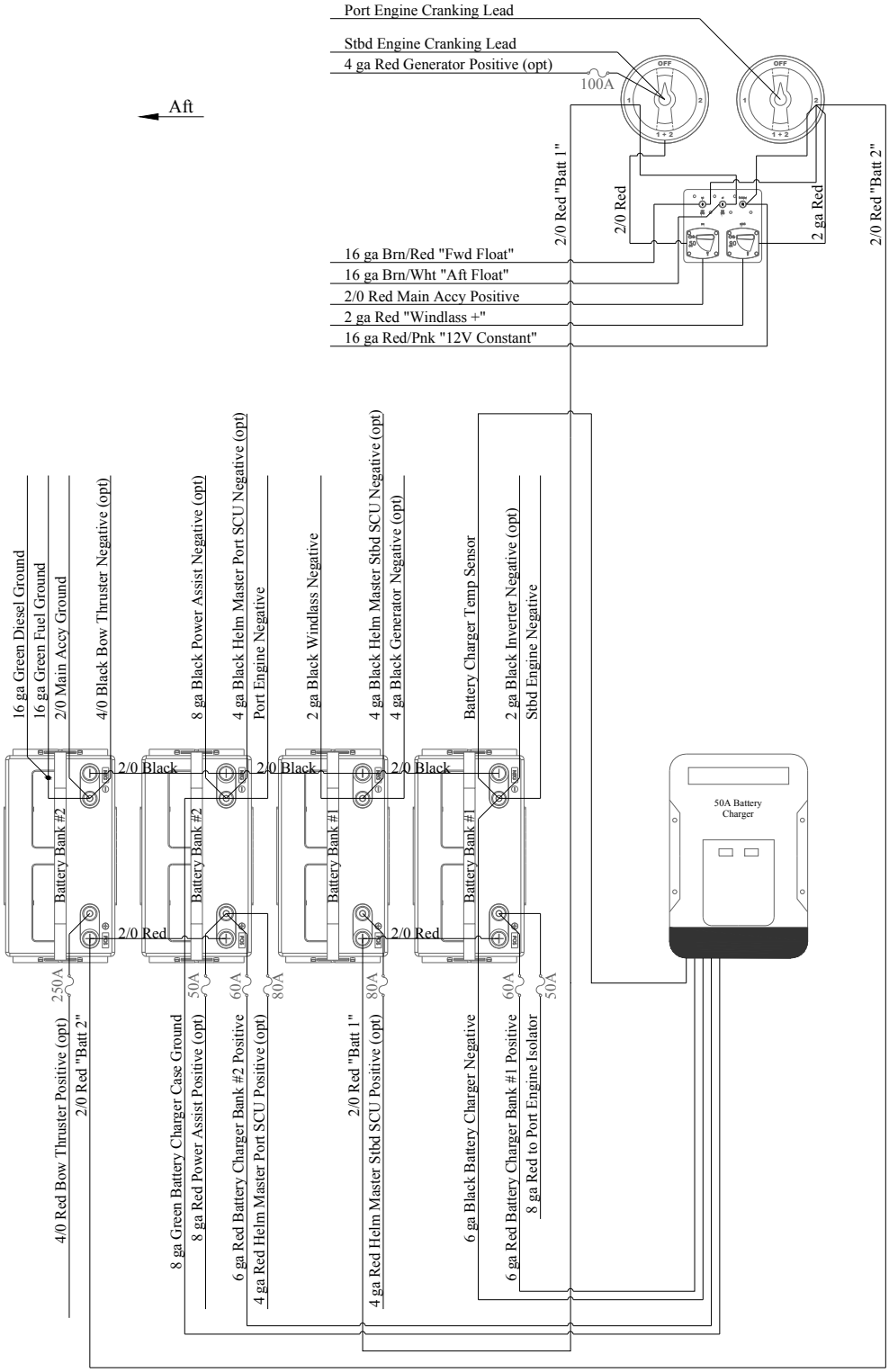


NOTE 1: Engine isolator fuse changes to 100A MRCB if the boat is powered with V6 engines.

# Freshwater System

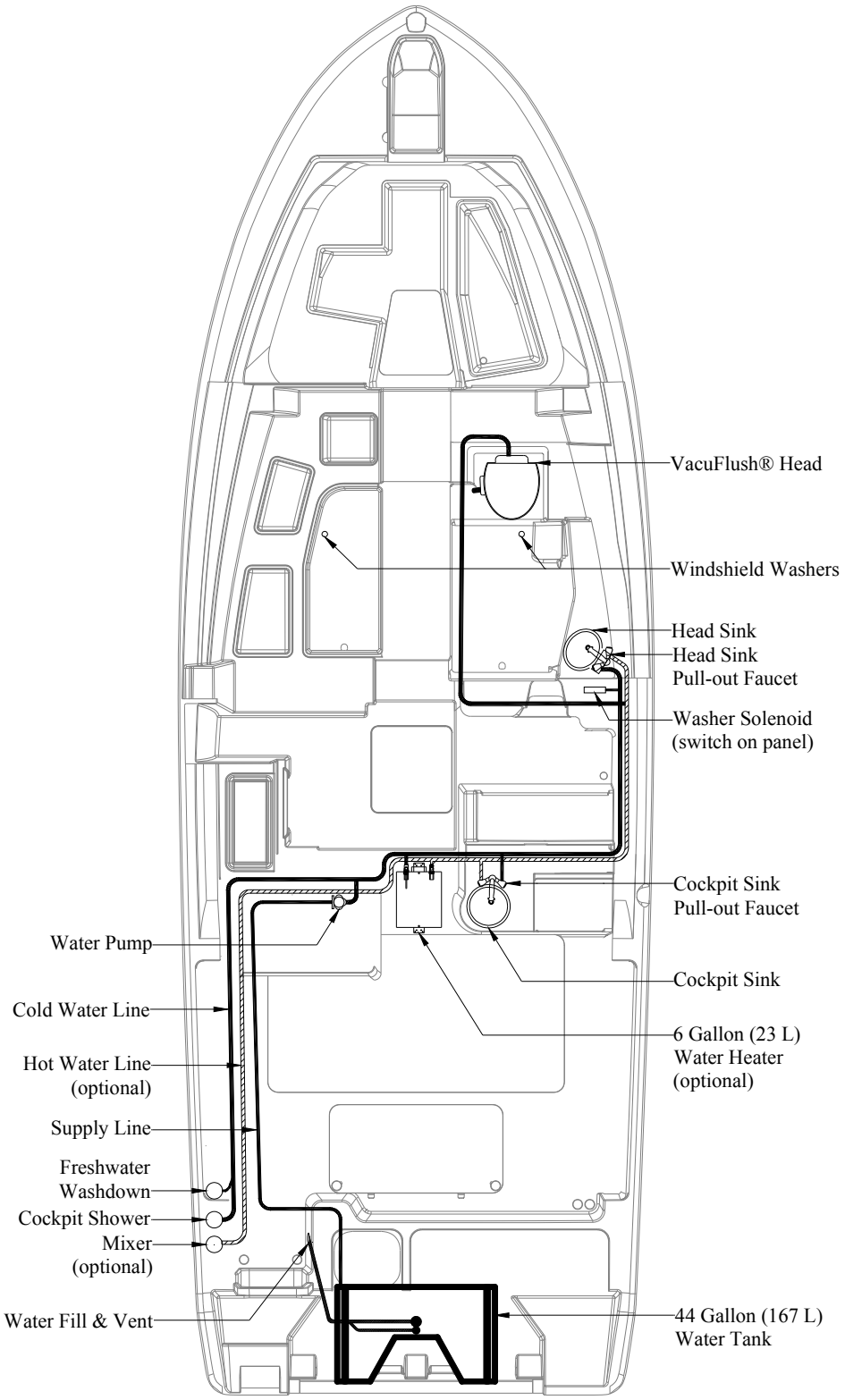

# Safety Labels And Location

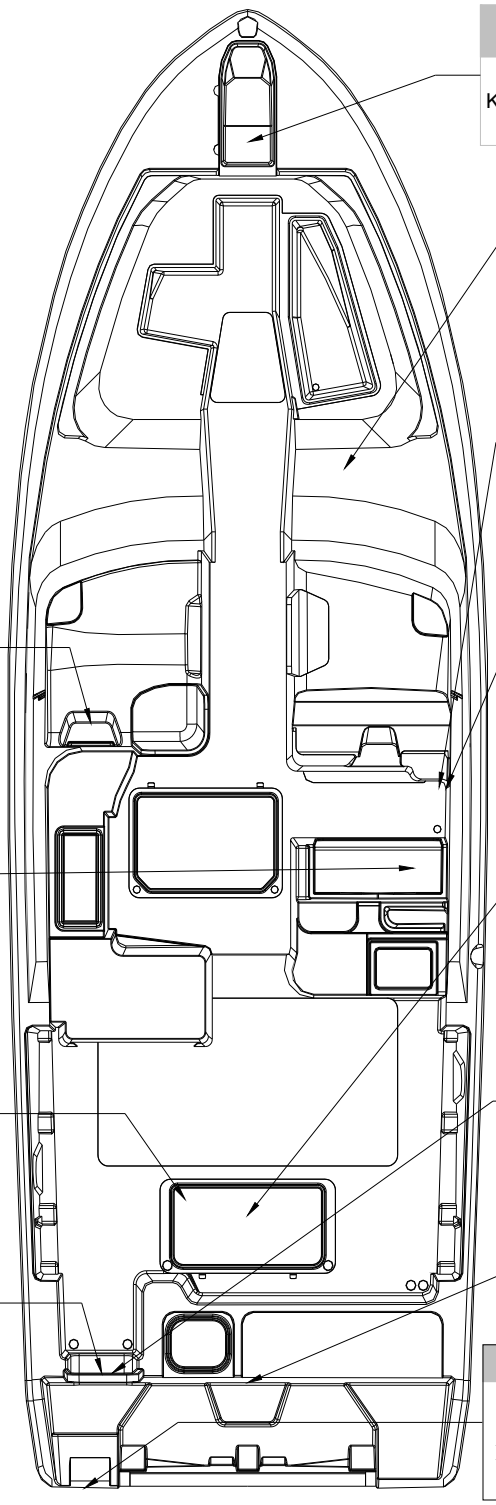

**⚠CAUTION**

TO AVOID PERSONAL INJURY, KEEP HANDS FREE OF WINDLASS AND ROPE WHEN OPERATING

**CAUTION**

THIS MARINE HEAD SYSTEM WILL FLUSH, MACERATE, AND DISCHARGE WASTE AND MARINE/RV TOILET TISSUE ONLY. ANY OTHER MATERIALS CAN RESULT IN DAMAGE OR SYSTEM MALFUNCTION.

**▲ WARNING**

Carbon monoxide (CO) can cause brain damage or death
Engine and generator exhaust contains odorless and colorless carbin monoxide gas.
Signs of carbon monoxide poisoning include nausea, headache, dizziness, or drowsiness, and lack of consciousness.
Get fresh air if anyone shows signs of carbon monoxide poisoning.
See Owner's Manual for information regarding carbon monoxide poisoning.
NW-204-08

**CAUTION!**
**DO NOT TURN BREAKER ON WITHOUT WATER IN THE WATER HEATER**

(Optional) On AC/DC Panel

**⚠ WARNING**

ROTATING PROPELLER MAY CAUSE SERIOUS INJURY OR DEATH. SHUT OFF ENGINE WHEN NEAR PERSONS IN THE WATER.
NW-207-11

**⚠ WARNING**

Gasoline vapors are explosive. Open flames can ignite gasoline vapors causing injury or death from fire or explosion. Do not operate grill when fueling.

Optional with grill

**⚠WARNING**

AVOID SERIOUS INJURY OR DEATH FROM FIRE OR EXPLOSION RESULTING FROM LEAKING FUEL. INSPECT SYSTEM FOR LEAKS AT LEAST ONCE A YEAR.
NMMA NW201-03

Inside Rigging Compartment

**⚠CAUTION**

LATCHES MUST BE SECURED WHEN LID IS CLOSED TO MAINTAIN SELF-BAILING COCKPIT CAPABILITY.

**▲ DANGER**

Carbon monoxide (CO) can cause brain damage or death.
Engine and generator exhaust contains odorless and colorless carbin monoxide gas.
Carbon monoxide will be around the back of the boat when engines or generators are running.
Move to fresh air, if you feel nausea, headache, dizziness, or drowsiness.

**⚠WARNING**

DOOR MUST BE CLOSED AND LOCKED WHILE ENGINES ARE IN OPERATION

**▲CAUTION**

TO PREVENT INJURY OR DAMAGE TO THE BOAT, ENSURE ALL HARDWARE IS PROPERLY TIGHTENED PRIOR TO USING SKI PYLON

(Optional) 2 labels located on ski pylon

**⚠ WARNING**

ROTATING PROPELLER MAY CAUSE SERIOUS INJURY OR DEATH. DO NOT APPROACH OR USE LADDER WHEN ENGINE IS RUNNING.

# Livewell/Raw Water Washdown Layout

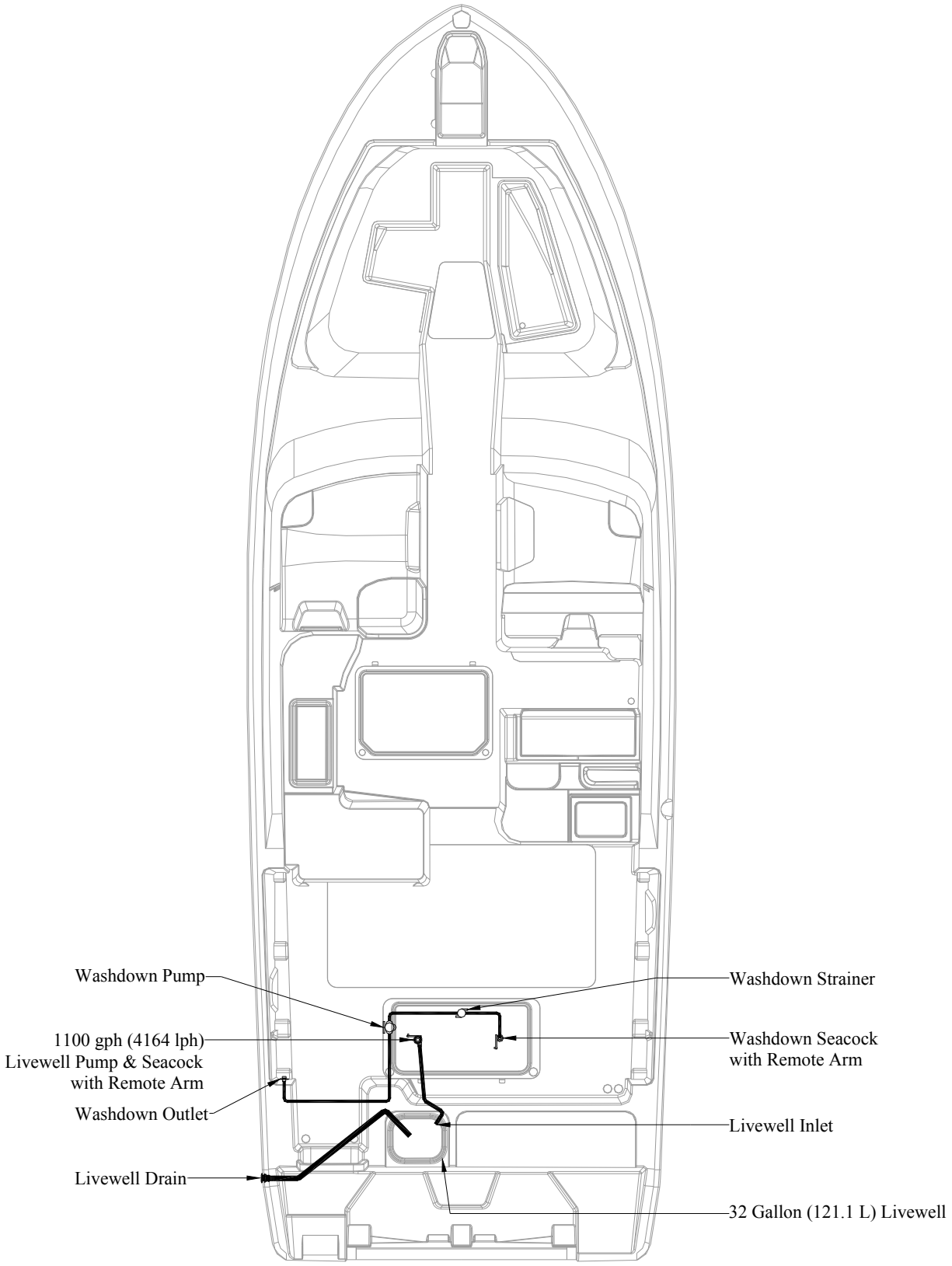

# Livewell/Raw Water Washdown System

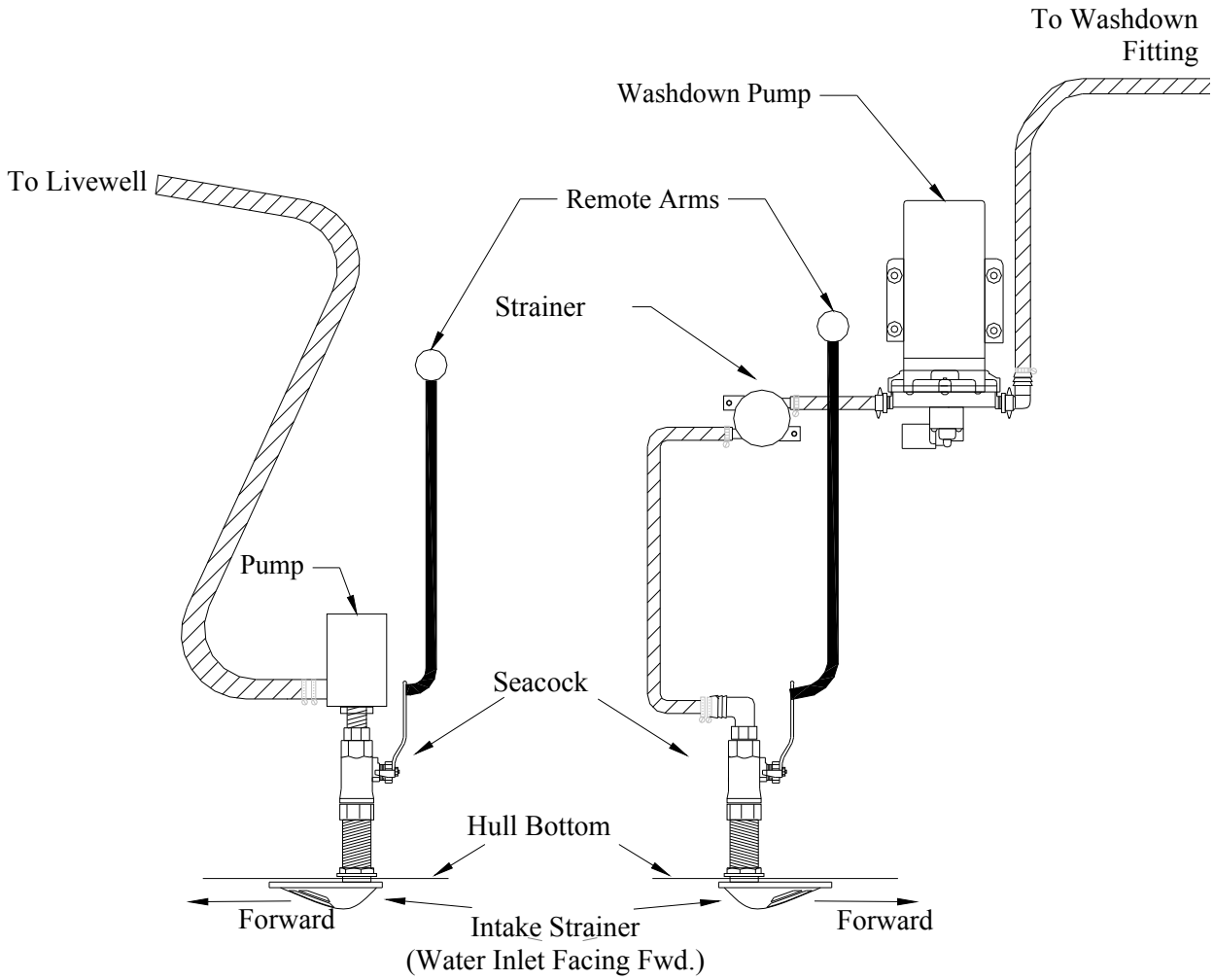

## VacuFlush® Head Layout

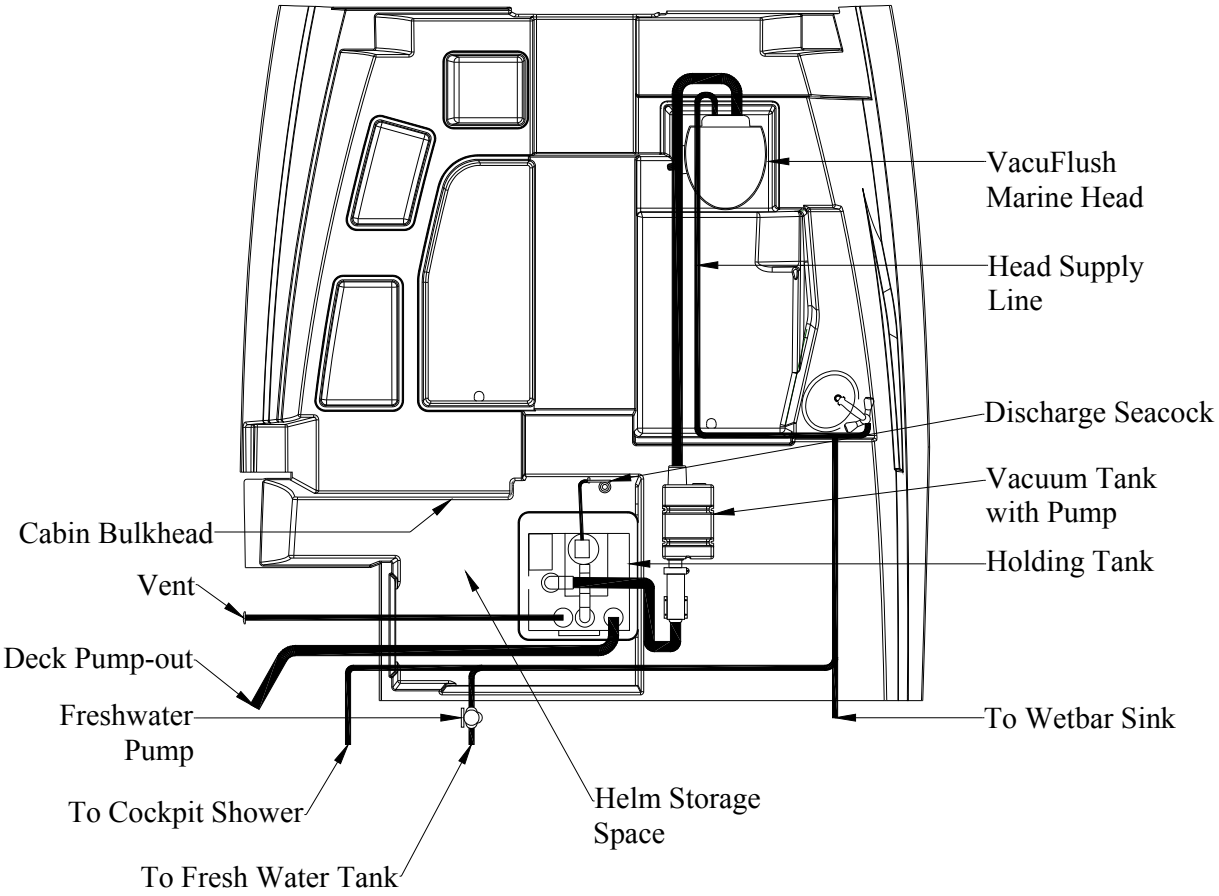


NOTE:
The water pressure pump, holding tank, vacuum tank w/ pump, discharge pump and the associated rigging can be accessed by removing panels in the helm storage compartment. Furthermore, the discharge seacock can be accessed through the floor of the helm.

# Stereo System Layout

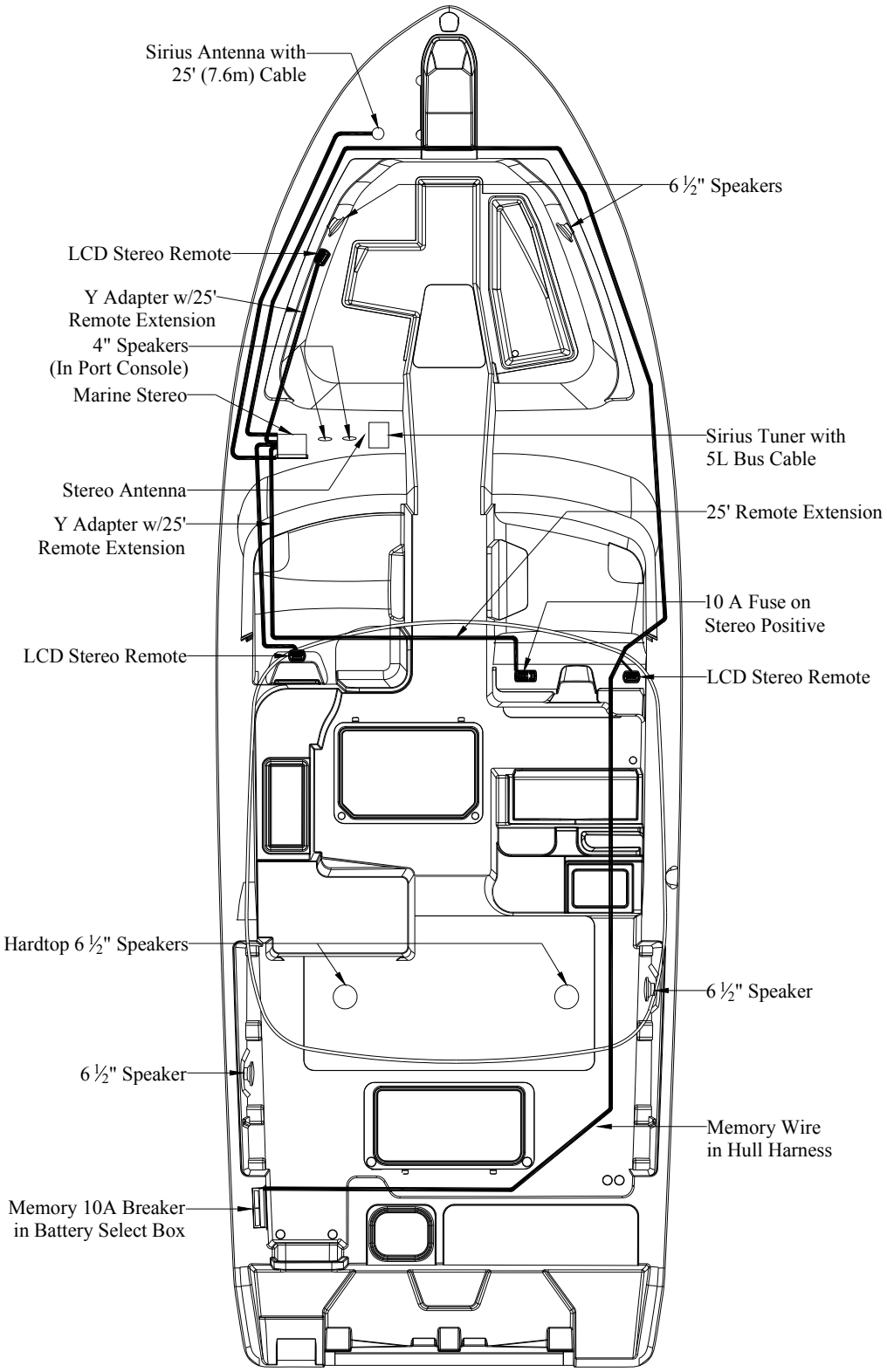

# Thru Hull Detail

| # | Description | # | Description |
|---|---|---|---|
| A | Cockpit Sink Drain | H | Scupper Drains |
| B | Fwd Bilge | I | Diesel Gen Exhaust (Optional) |
| C | A/C (Optional) | J | Livewell Drain/Overflow |
| D | Helm A/C (Optional) | K | Holding Tank Vent |
| E | Fwd Fishbox Drain | L | Shower Sump |
| F | Aft Fishbox Drain | M | Head Sink Drain |
| G | Aft Bilge | | |

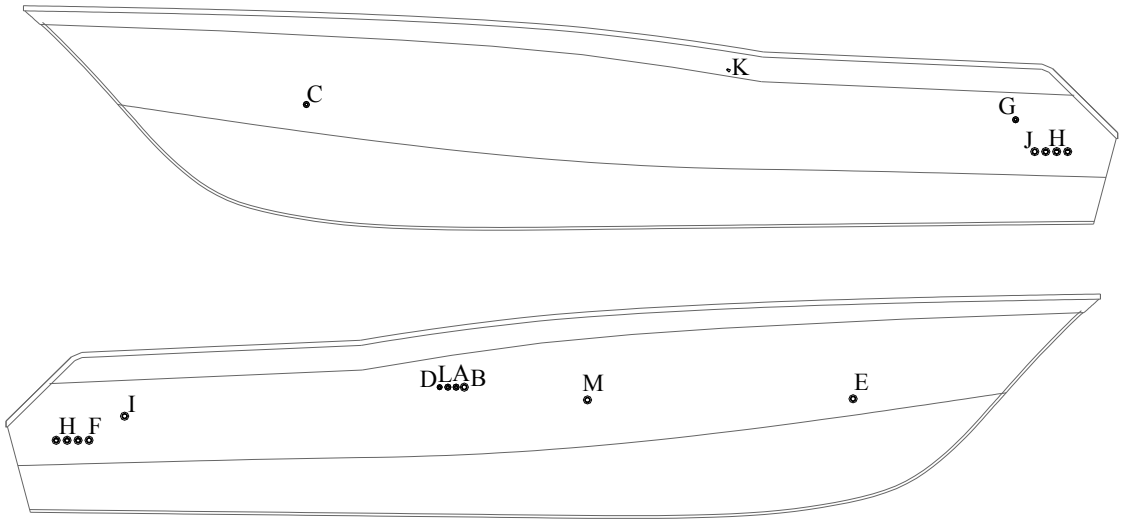

# Air Conditioner Layout

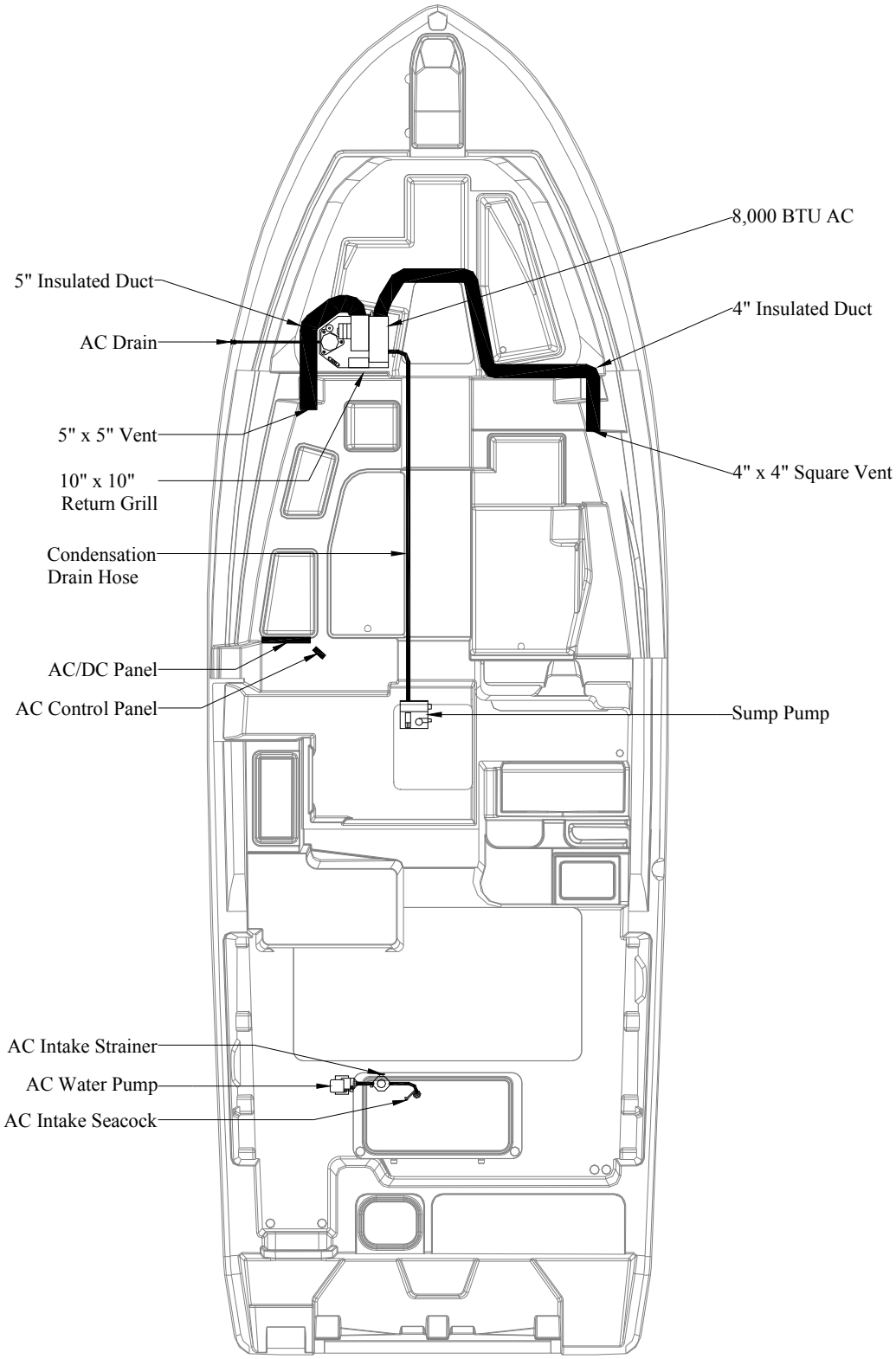

## Bow Thruster Layout

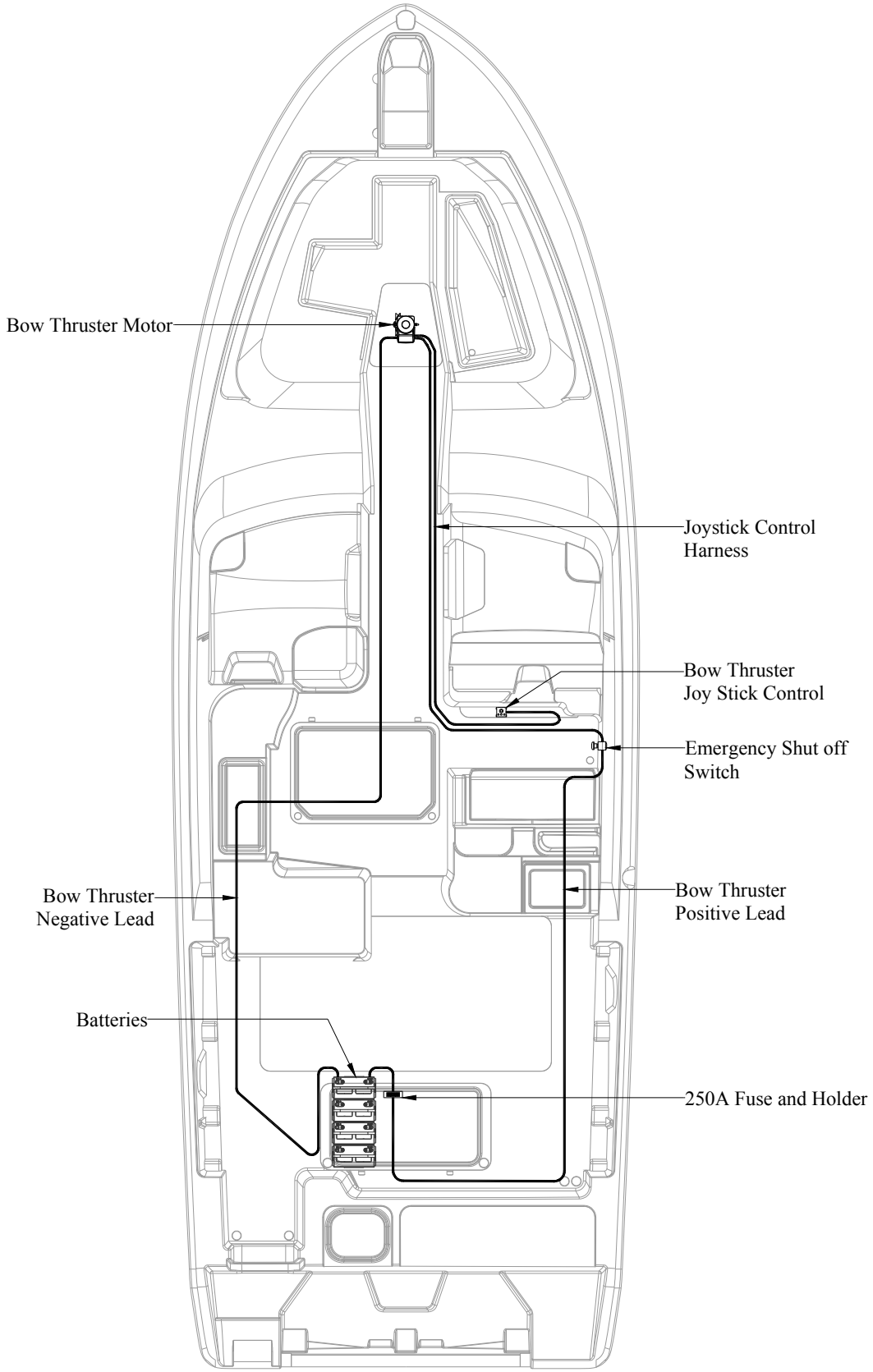

# Hardtop Wiring

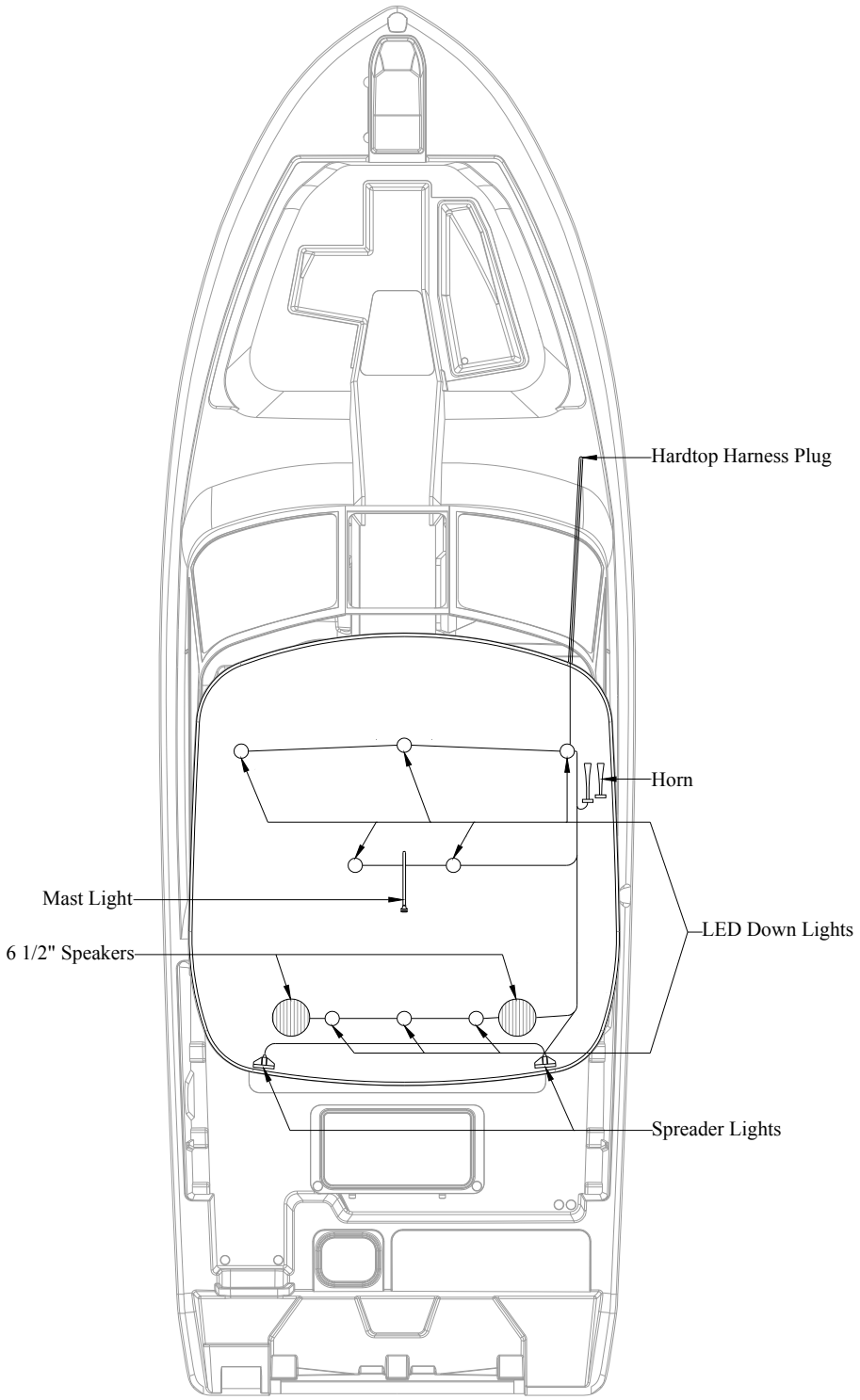

# AC Accessory Wiring

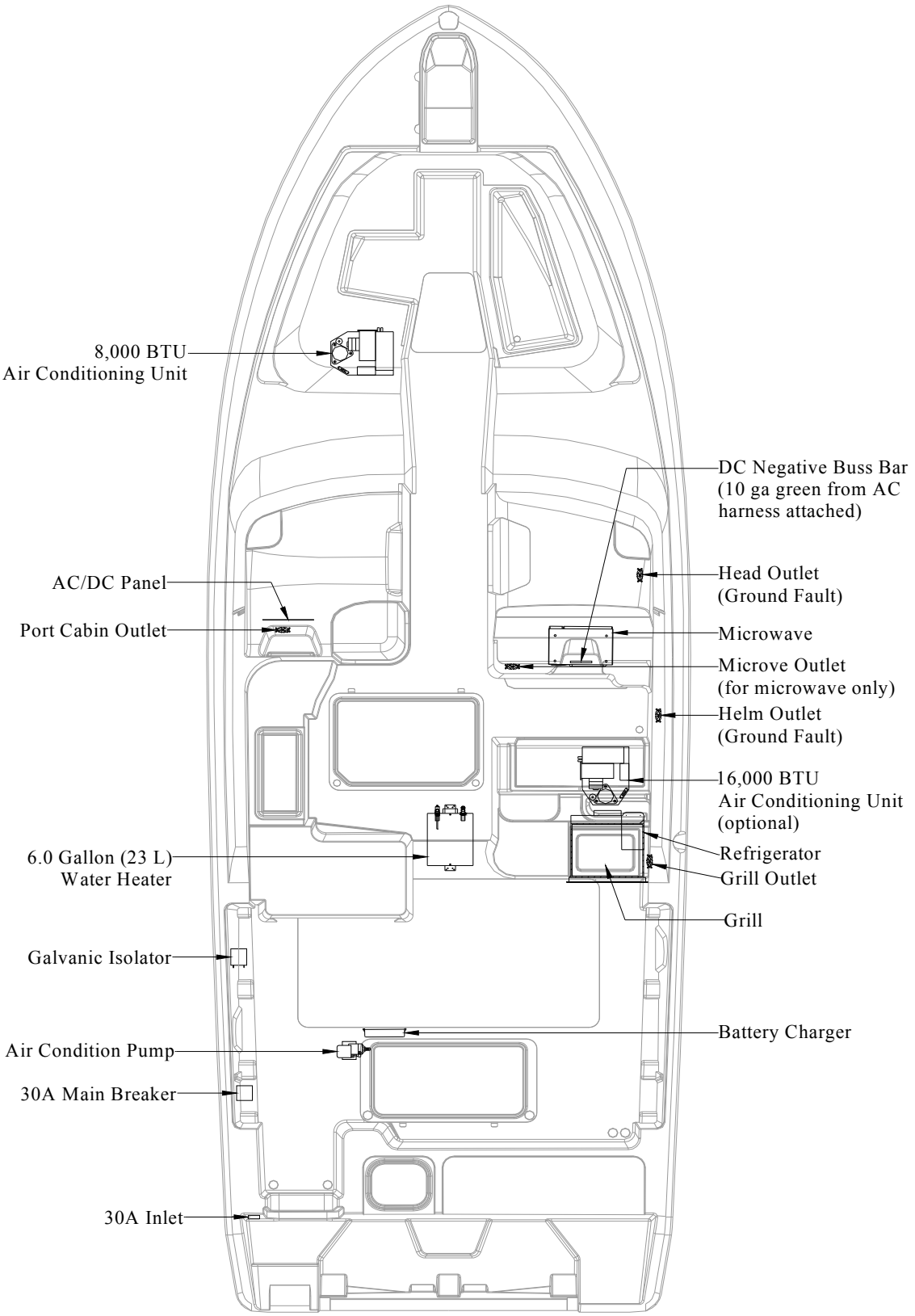

# Inverter Layout

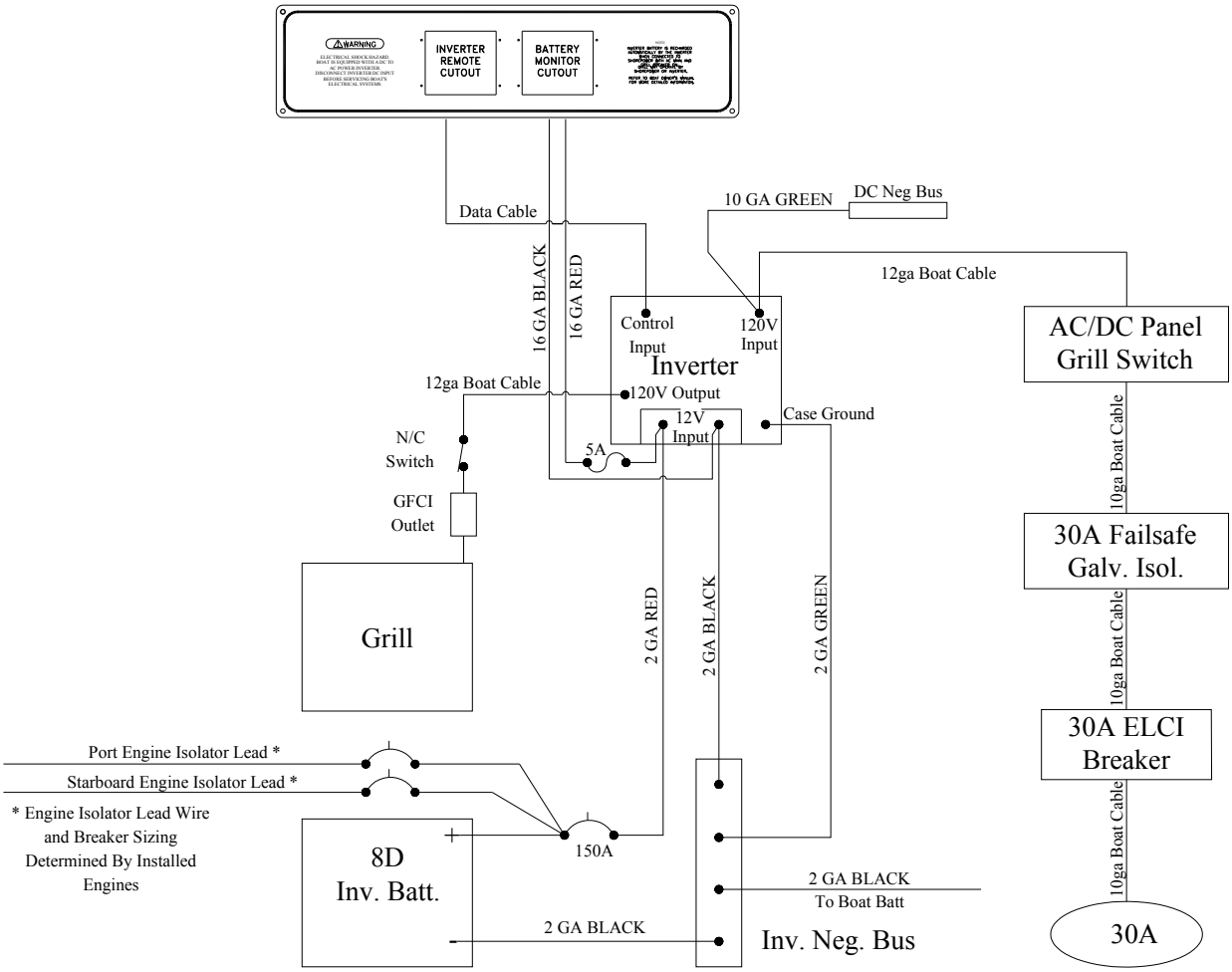

# 12V DC Cabin Switch Panel Diagram

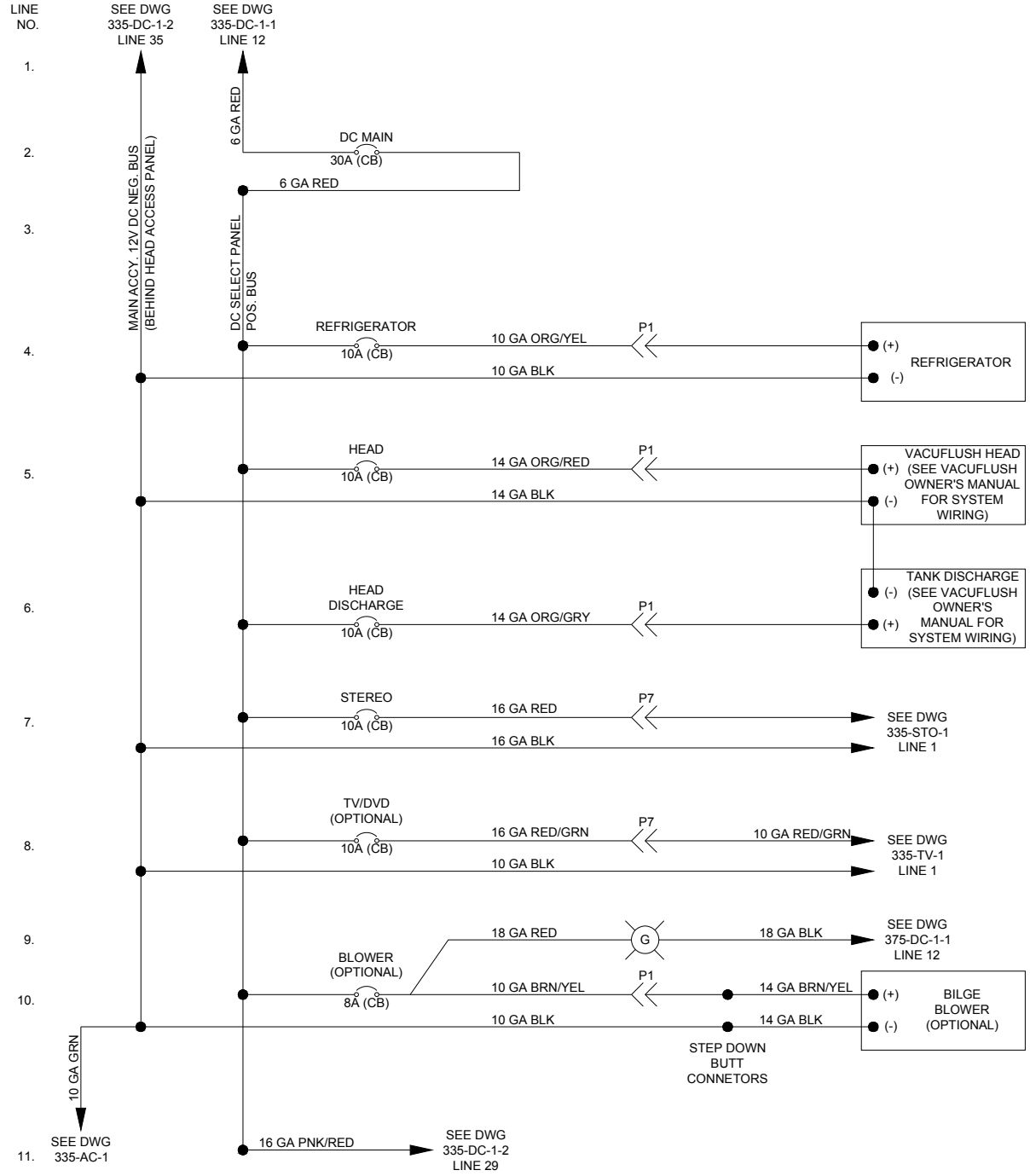


335-DC-2

NOTES:

1) SEE LAYOUT DRAWINGS FOR LOCATIONS OF COMPONENTS
2) BREAKERS ON BOATS NOT EQUIPPED WITH OPTIONAL EQUIPMENT WILL BE REPLACED WITH BLANK CAPS

# 12V DC Accessory Switch Panel Diagram

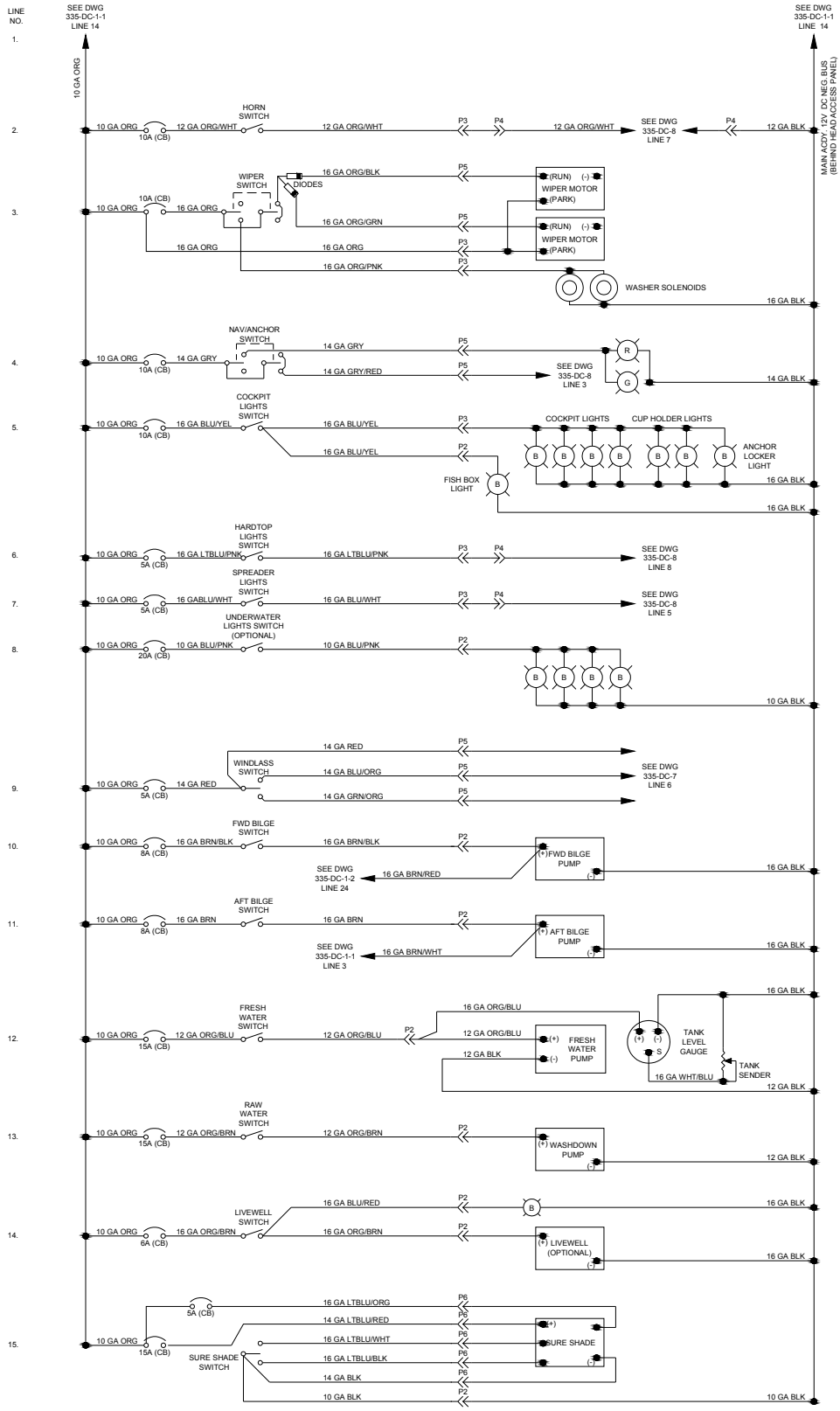


NOTES:

1) SEE LAYOUT DRAWINGS FOR COMPONENT LOCATIONS
2) ACTUATORS ON BOATS NOT EQUIPPED WITH OPTIONAL FEATURES WILL BE REPLACED WITH ACC. ACTUATORS

# 12V DC Ignition Circuit & Trim Diagram

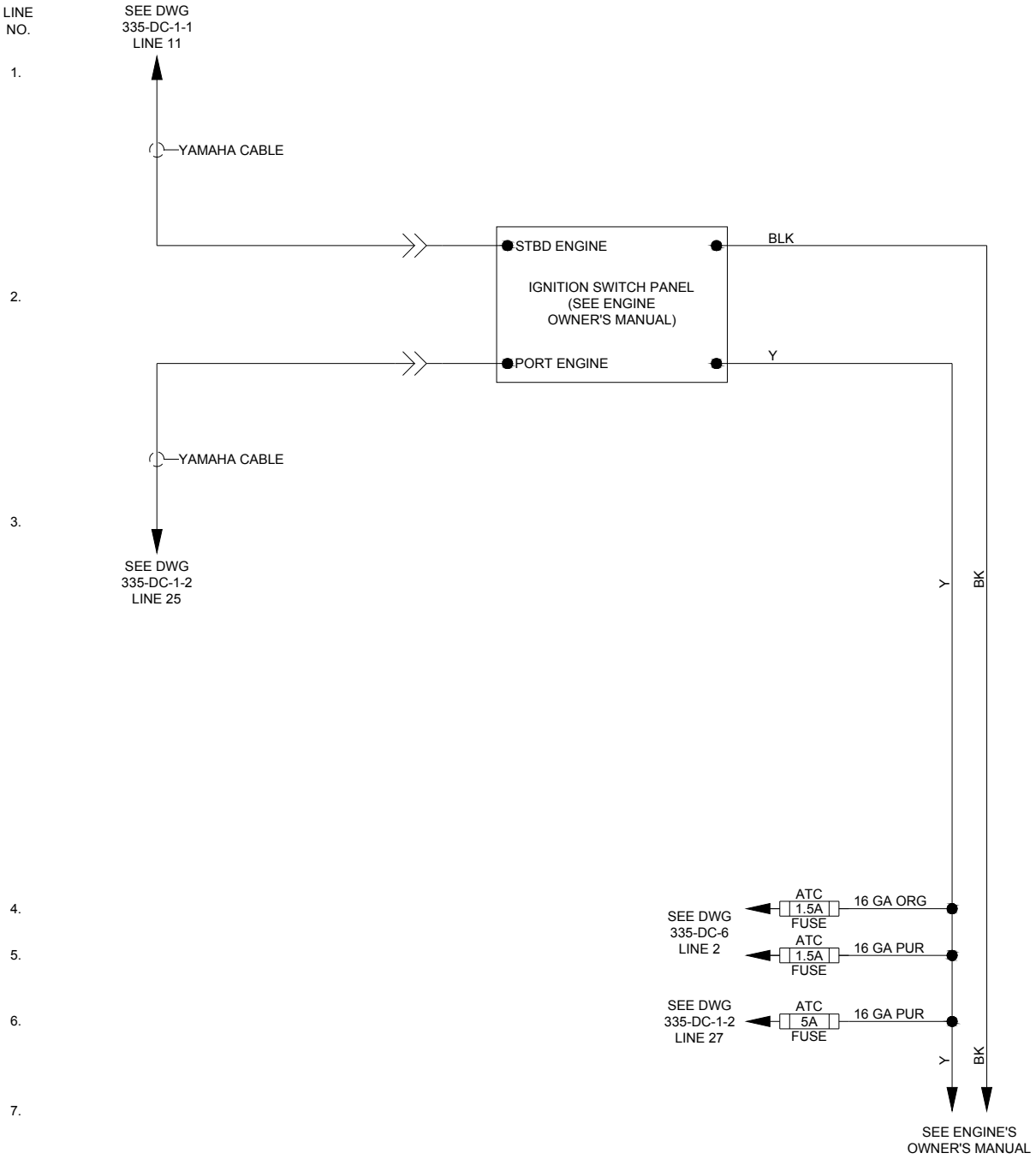


NOTES:

1) ◯— INDICATES MULTI-CONDUCTOR CABLE
2) SEE LAYOUT DRAWINGS FOR COMPONENT LOCATIONS
3) PURPLE WIRE AND FUSE NOT PRESENT ON LINE 6 ON BOATS EQUIPPED WITH YAMAHA HELM MASTER OPTION

335-DC-4

# 12V DC Fuse Block Diagram

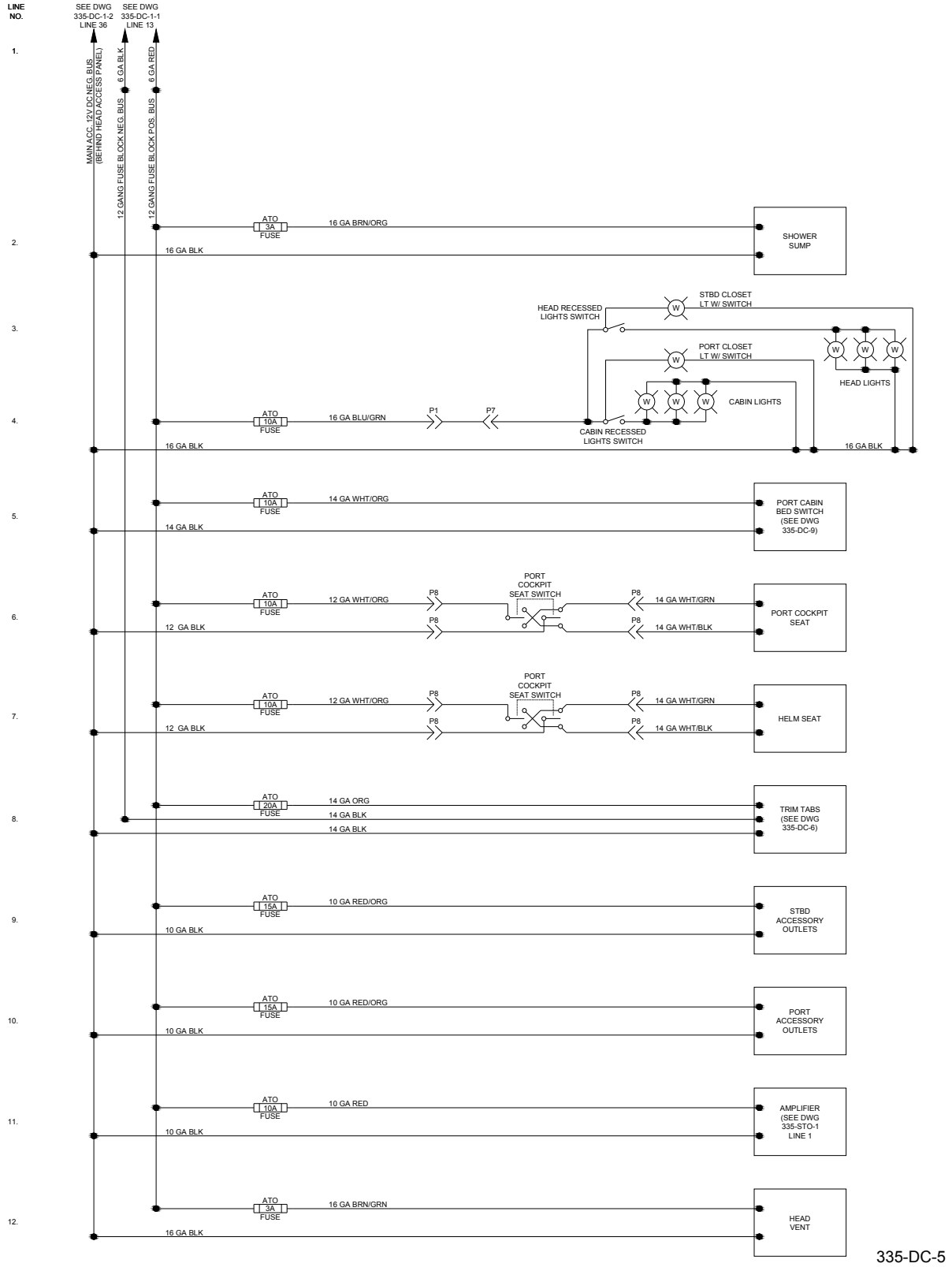


NOTES:

1) SEE LAYOUT DRAWINGS FOR COMPONENT LOCATIONS

# 12V DC Trim Tab Diagram

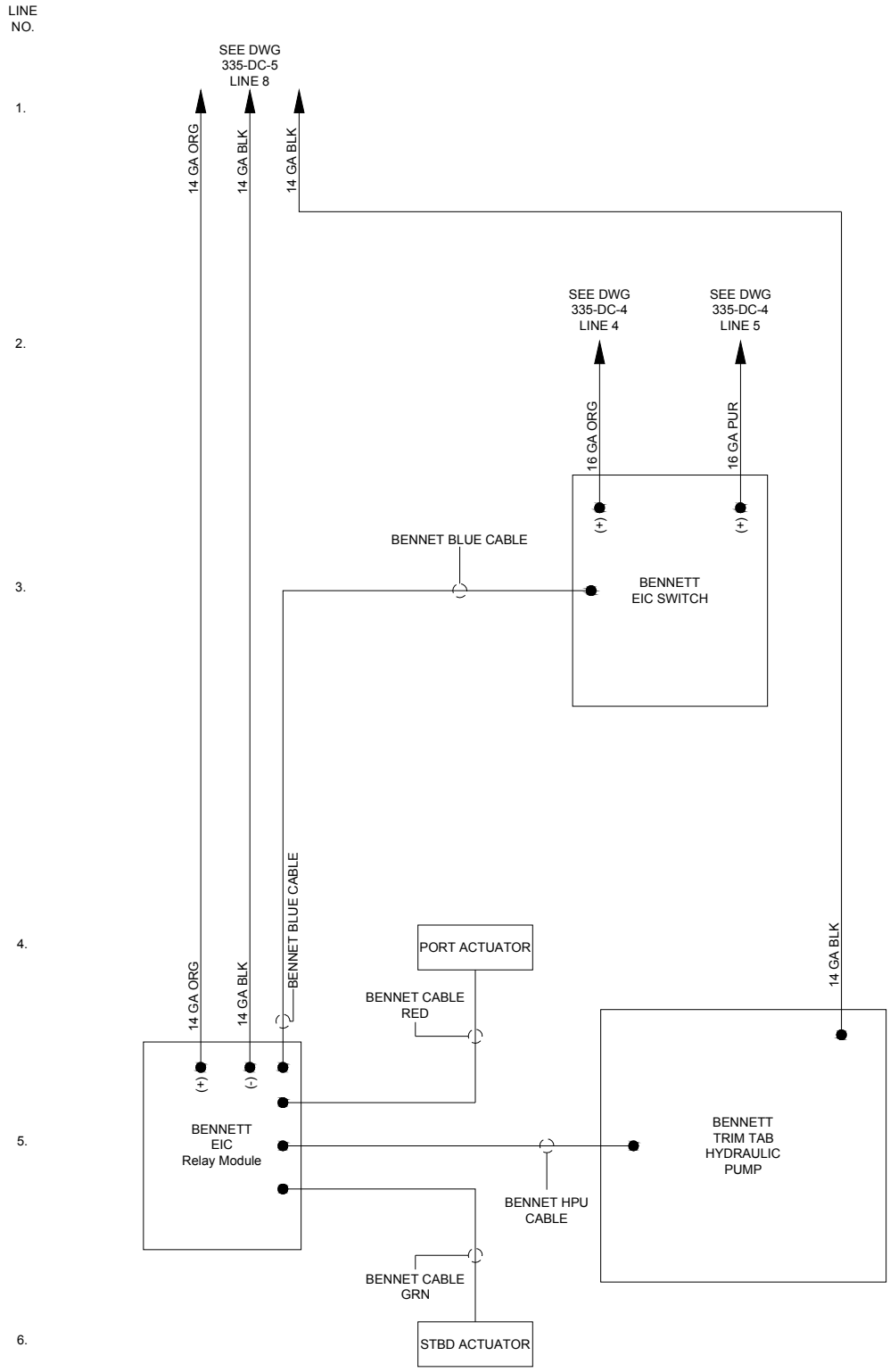


NOTES:

1) ⌒—INDICATES MULTI-CONDUCTOR CABLE
2) SEE LAYOUT DRAWINGS FOR COMPONENT LOCATIONS

335-DC-6

# 12V DC Anchor Windlass Diagram

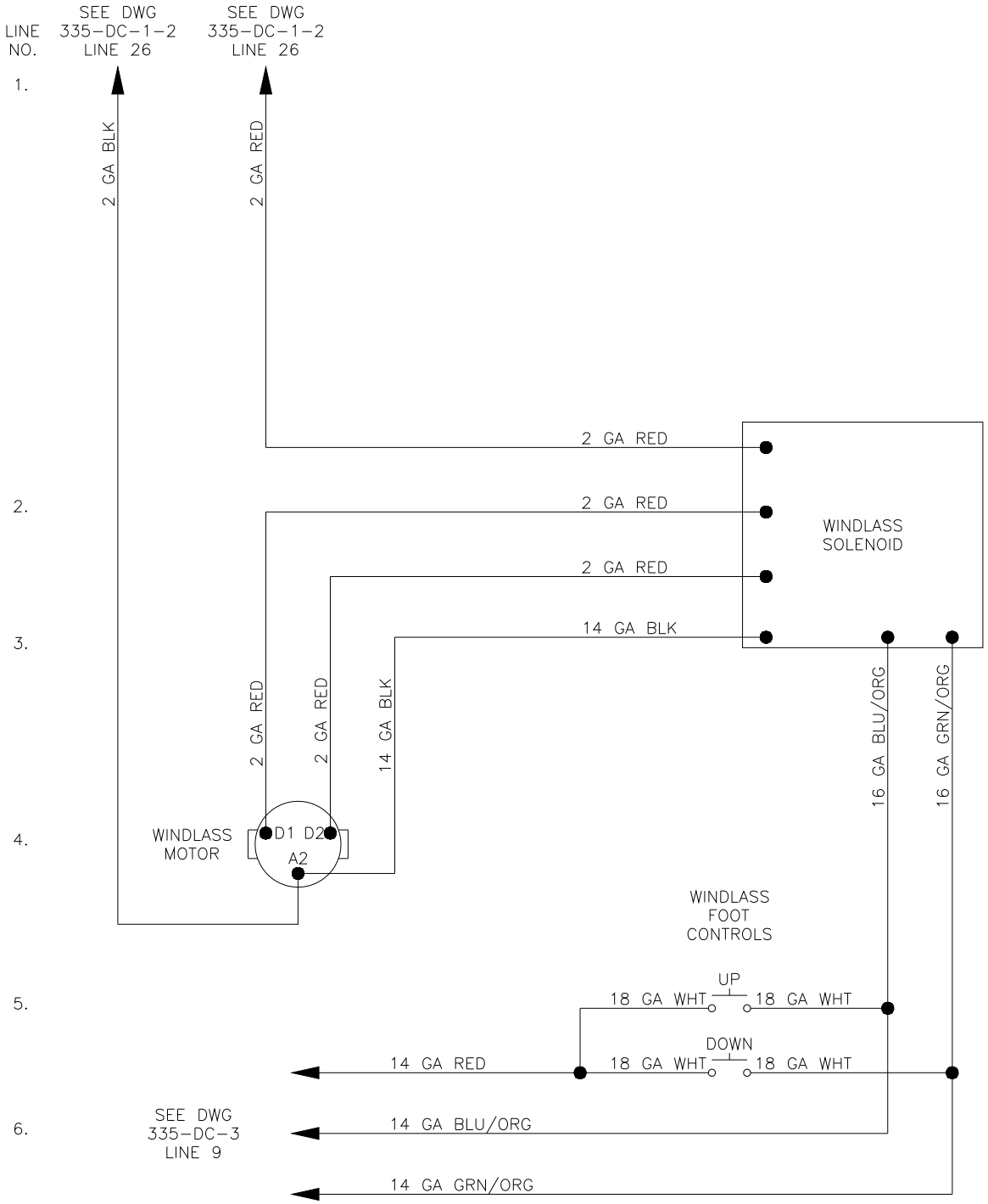


NOTES:

1) SEE LAYOUT DRAWINGS FOR COMPONENT LOCATIONS

335-DC-7

# 12V DC Hardtop Diagram

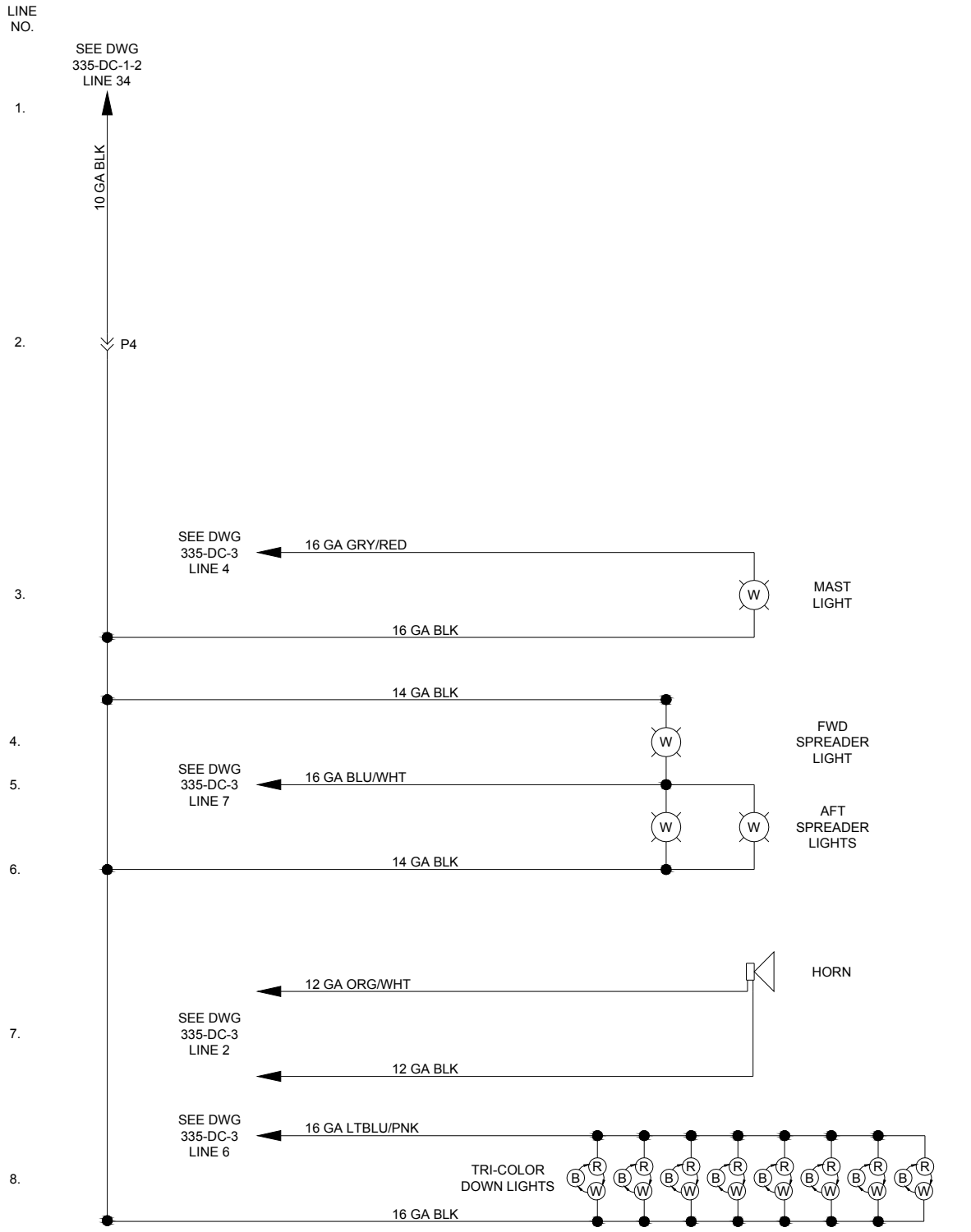


335-DC-8

NOTES:

1) SEE LAYOUT DRAWINGS FOR COMPONENT LOCATIONS

# 120 V AC Electrical Diagram

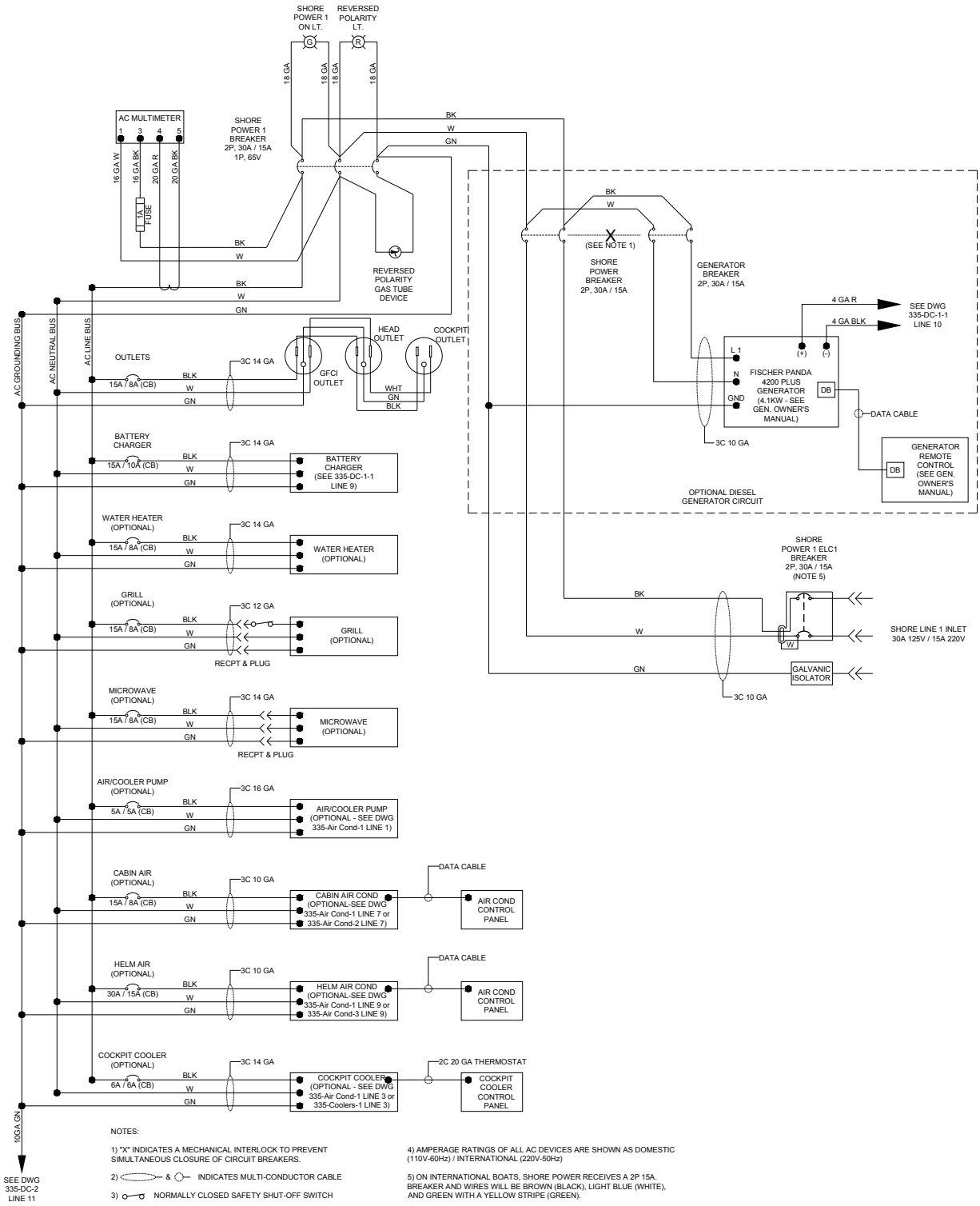


NOTES:

1) "X" INDICATES A MECHANICAL INTERLOCK TO PREVENT SIMULTANEOUS CLOSURE OF CIRCUIT BREAKERS.

2) & INDICATES MULTI-CONDUCTOR CABLE

3) NORMALLY CLOSED SAFETY SHUT-OFF SWITCH

4) AMPERAGE RATINGS OF ALL AC DEVICES ARE SHOWN AS DOMESTIC (110V-60Hz) / INTERNATIONAL (220V-50Hz)

5) ON INTERNATIONAL BOATS, SHORE POWER RECEIVES A 2P 15A. BREAKER AND WIRES WILL BE BROWN (BLACK), LIGHT BLUE (WHITE), AND GREEN WITH A YELLOW STRIPE (GREEN).

# AC - One Line Diagram

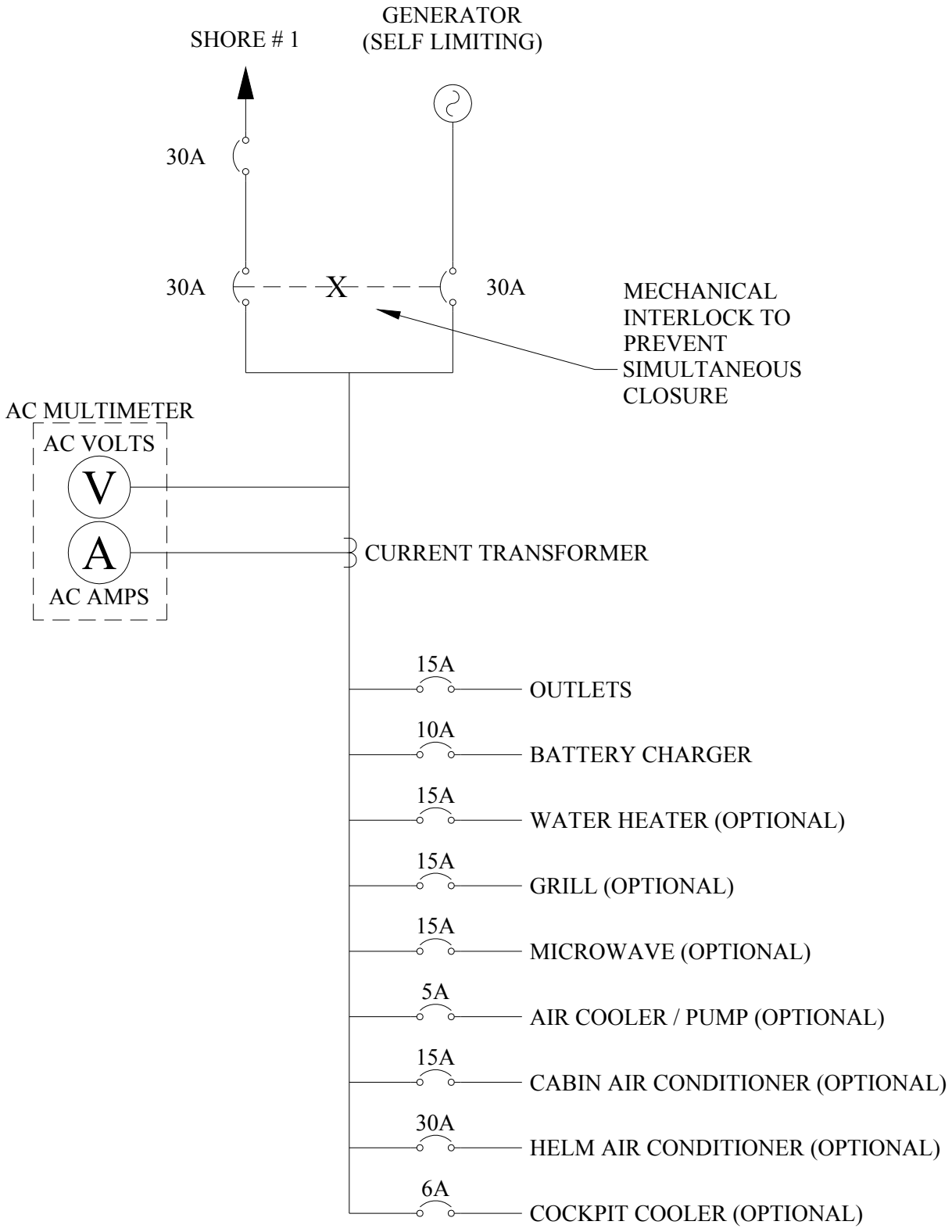

# Helm Air, Cabin Air, and Cockpit Cooler

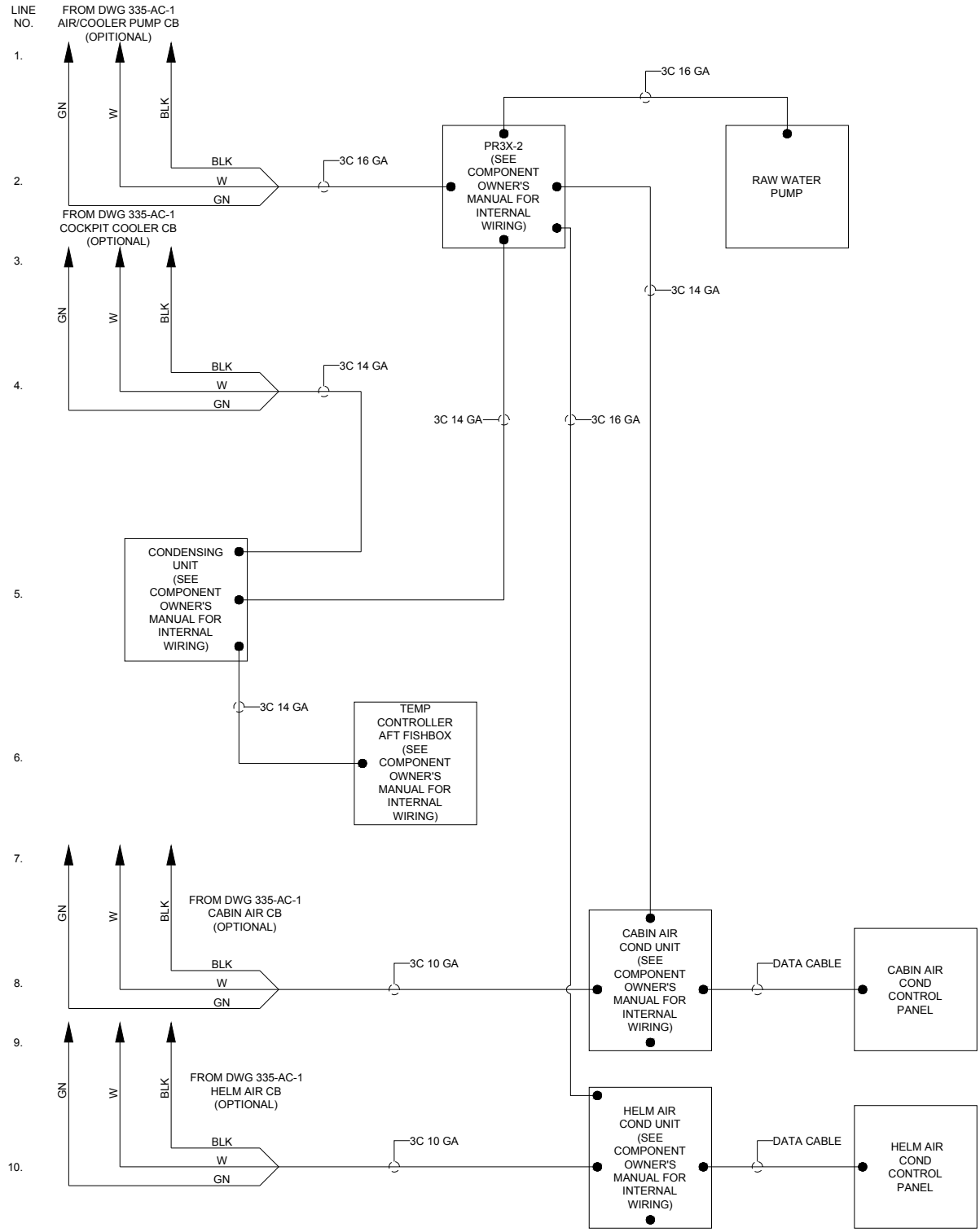


NOTES:

1) INDICATES MULTI-CONDUCTOR CABLE

# Cabin Air Conditioning

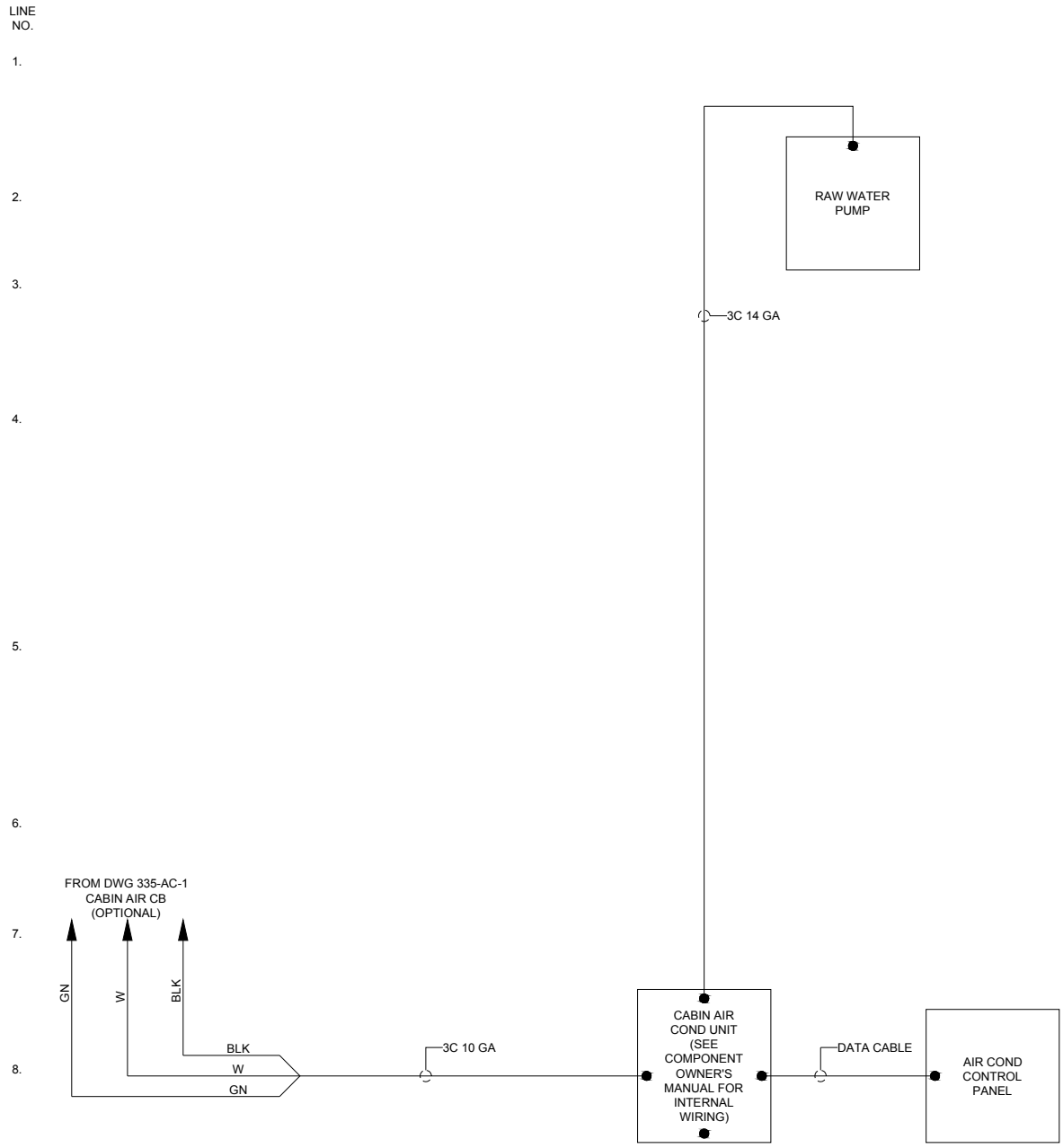


NOTES:

1) INDICATES MULTI-CONDUCTOR CABLE

# Helm Air Conditioning

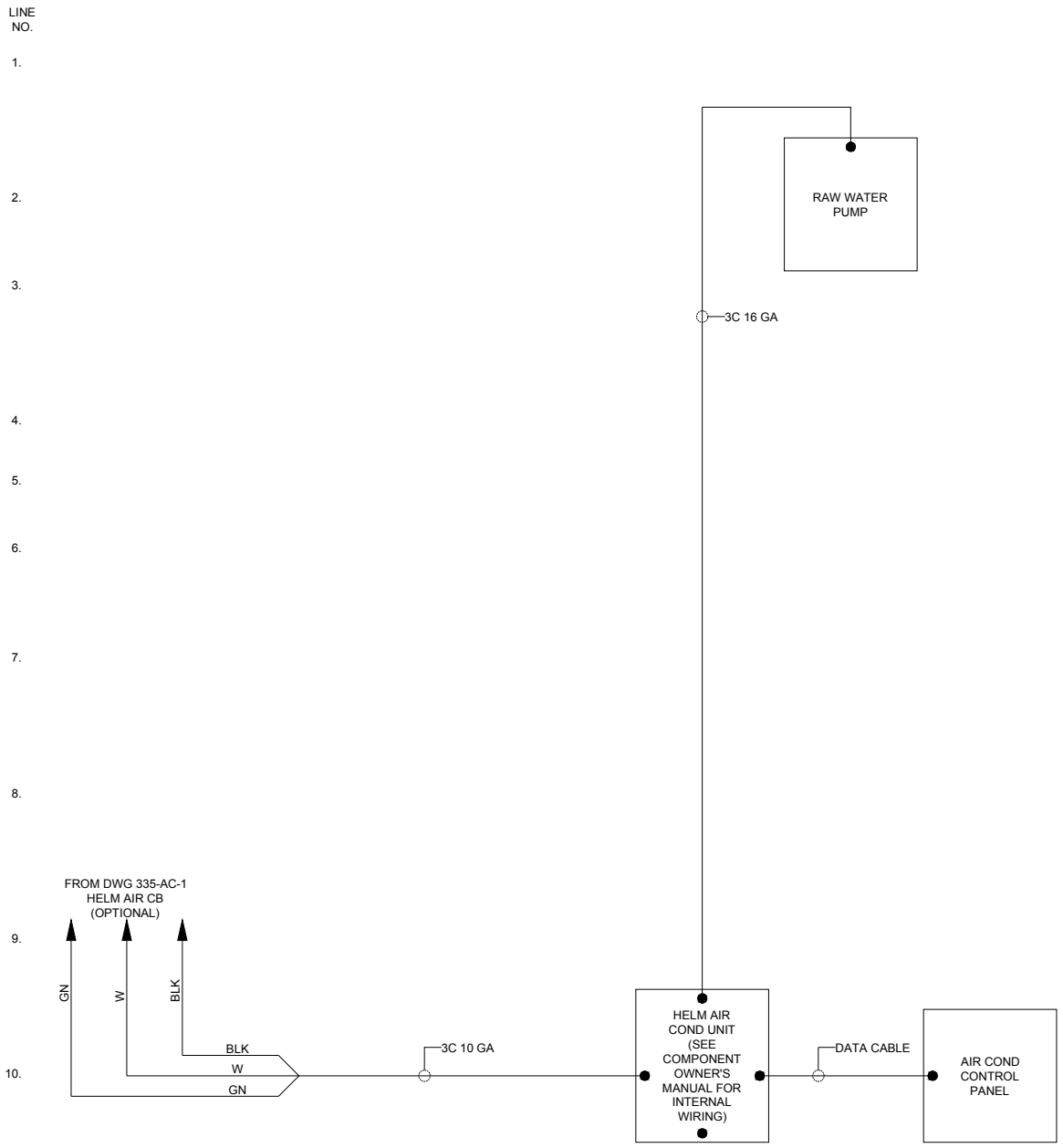


NOTES:

1) ◯— INDICATES MULTI-CONDUCTOR CABLE

# Cockpit Cooler Diagram

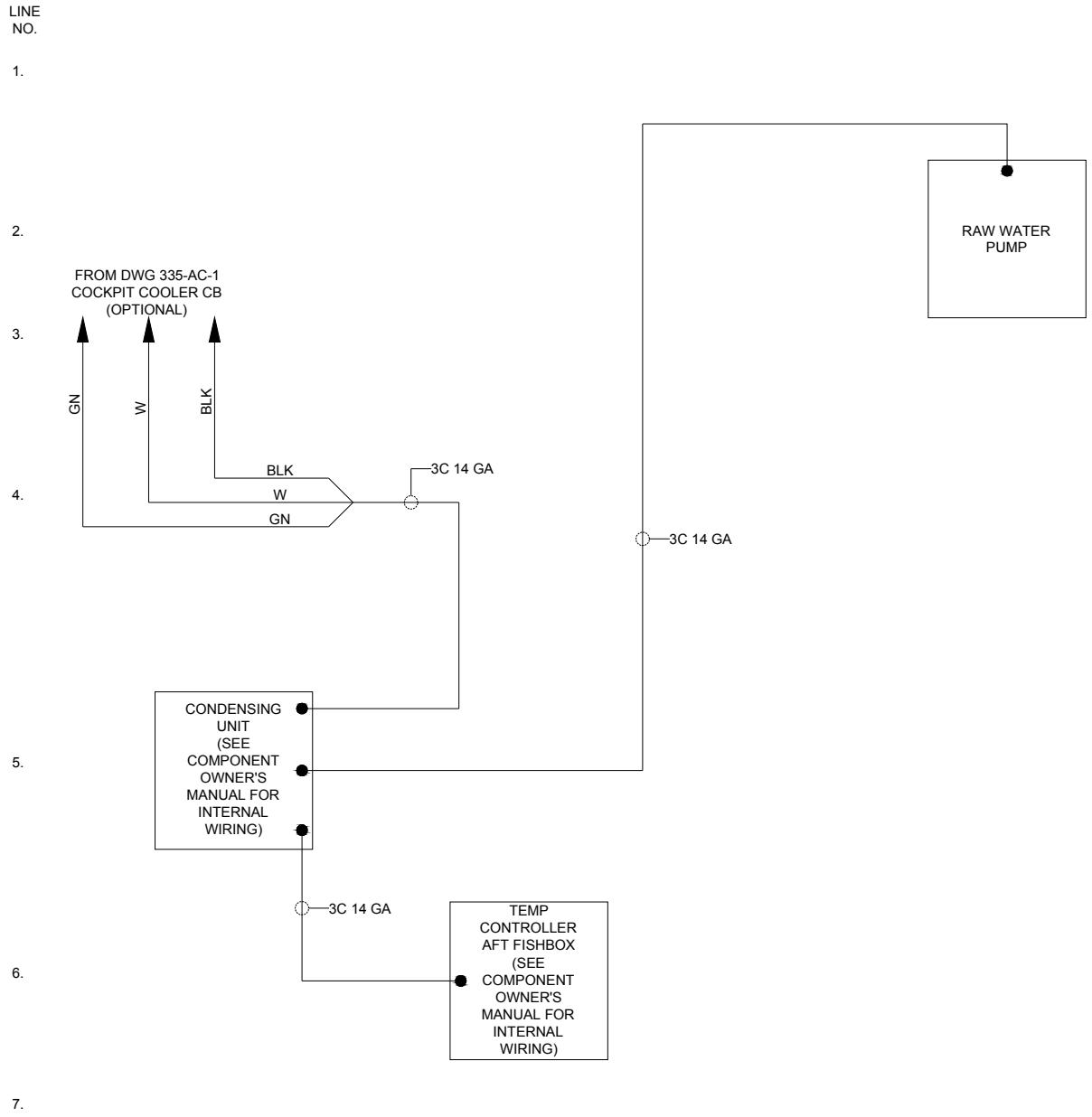


NOTES:

1) ◯— INDICATES MULTI-CONDUCTOR CABLE

# High Bilge Water Alarm Diagram

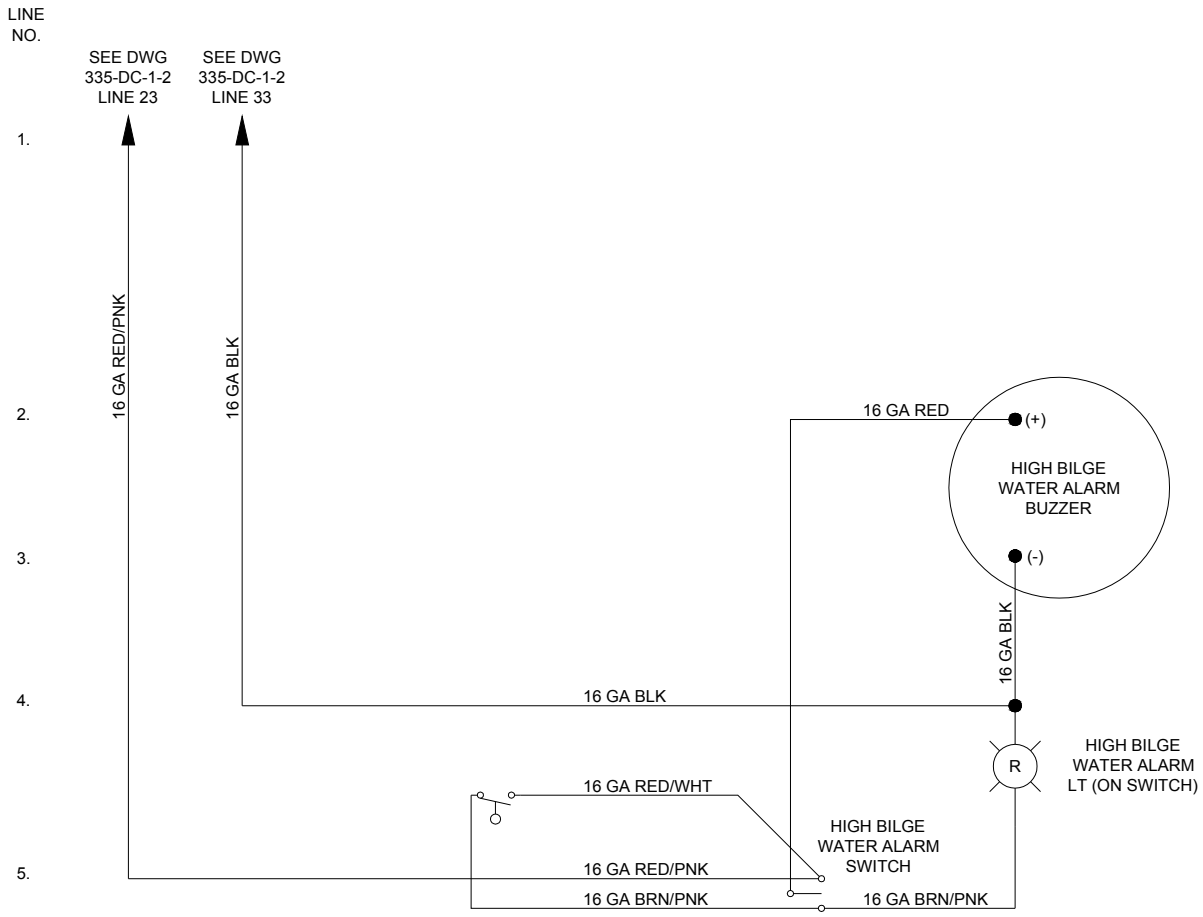


NOTES:

1) SEE LAYOUT DRAWINGS FOR COMPONENT LOCATIONS

335-HWA-1

# 12V DC Stereo Diagram

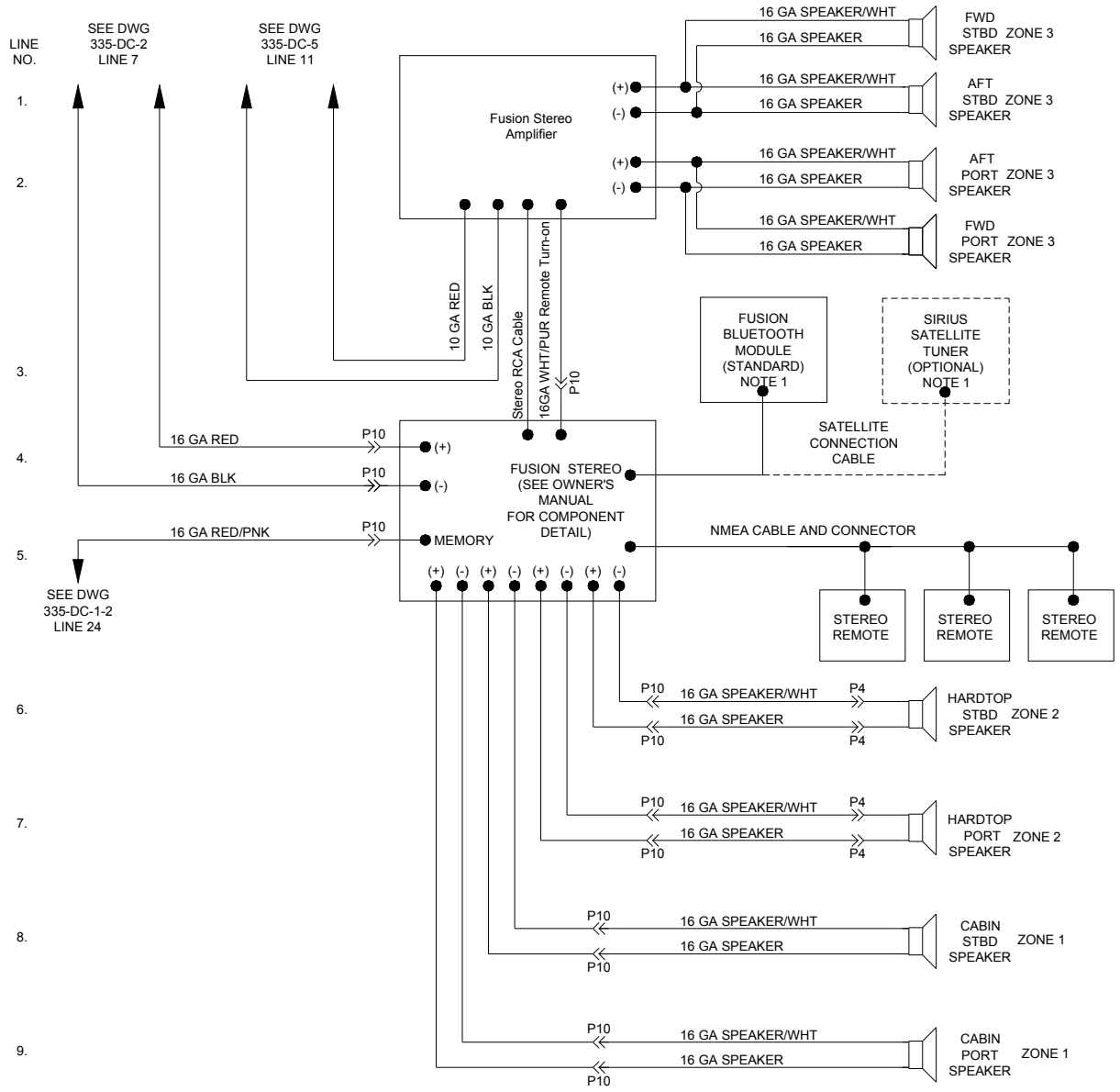


NOTES:

1) BLUETOOTH MODULE IS DELETED WITH SATELLITE (SAT) OPTION
2) SEE LAYOUT DRAWINGS FOR COMPONENT LOCATIONS

335-STO-1

# TV/DVD Diagram

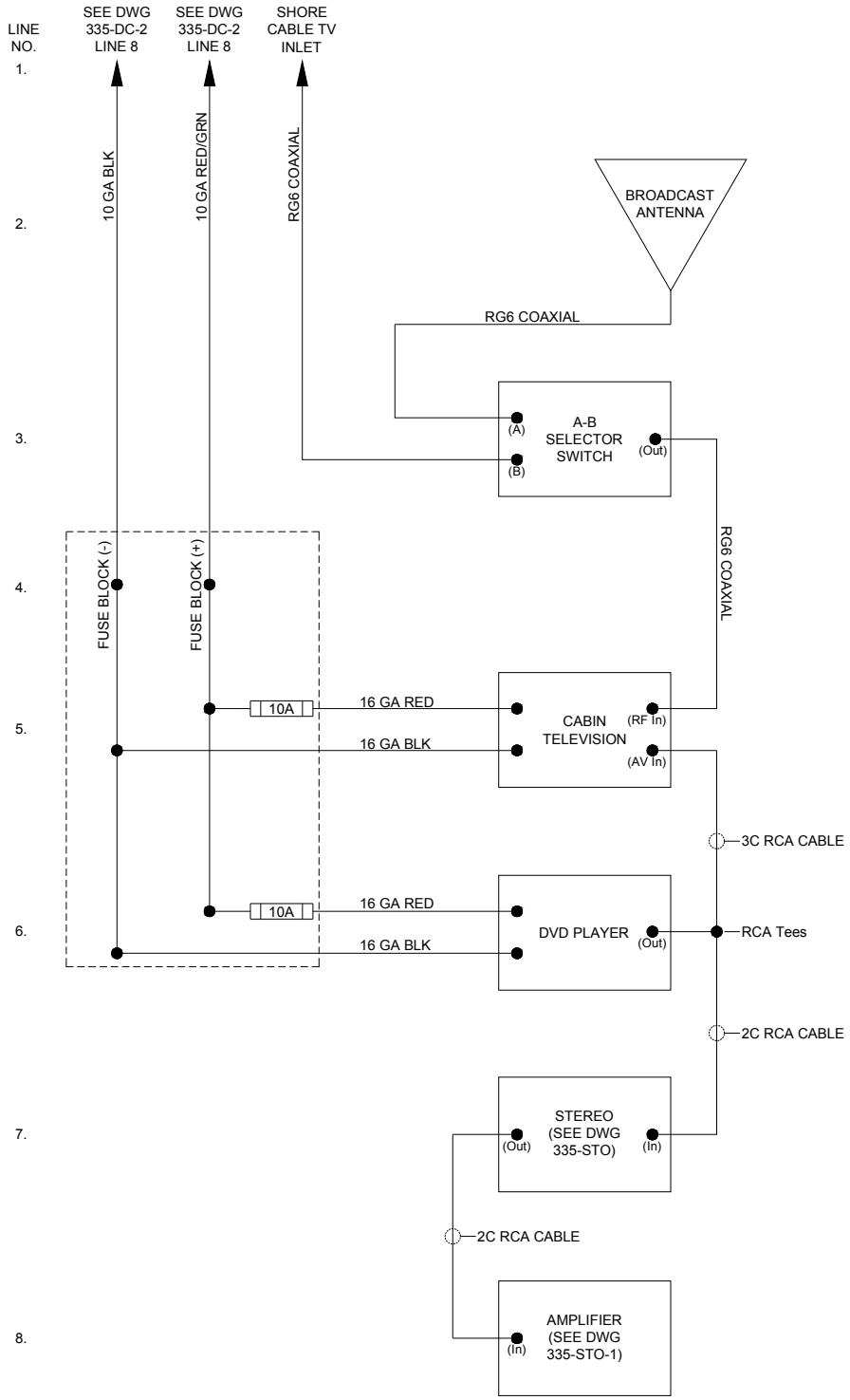


335-TV-1

NOTES:

1) ◯—INDICATES MULTI-CONDUCTOR CABLE
2) SEE LAYOUT DRAWINGS FOR COMPONENT LOCATIONS

# Electric Cabin Berth (Out Position) Diagram

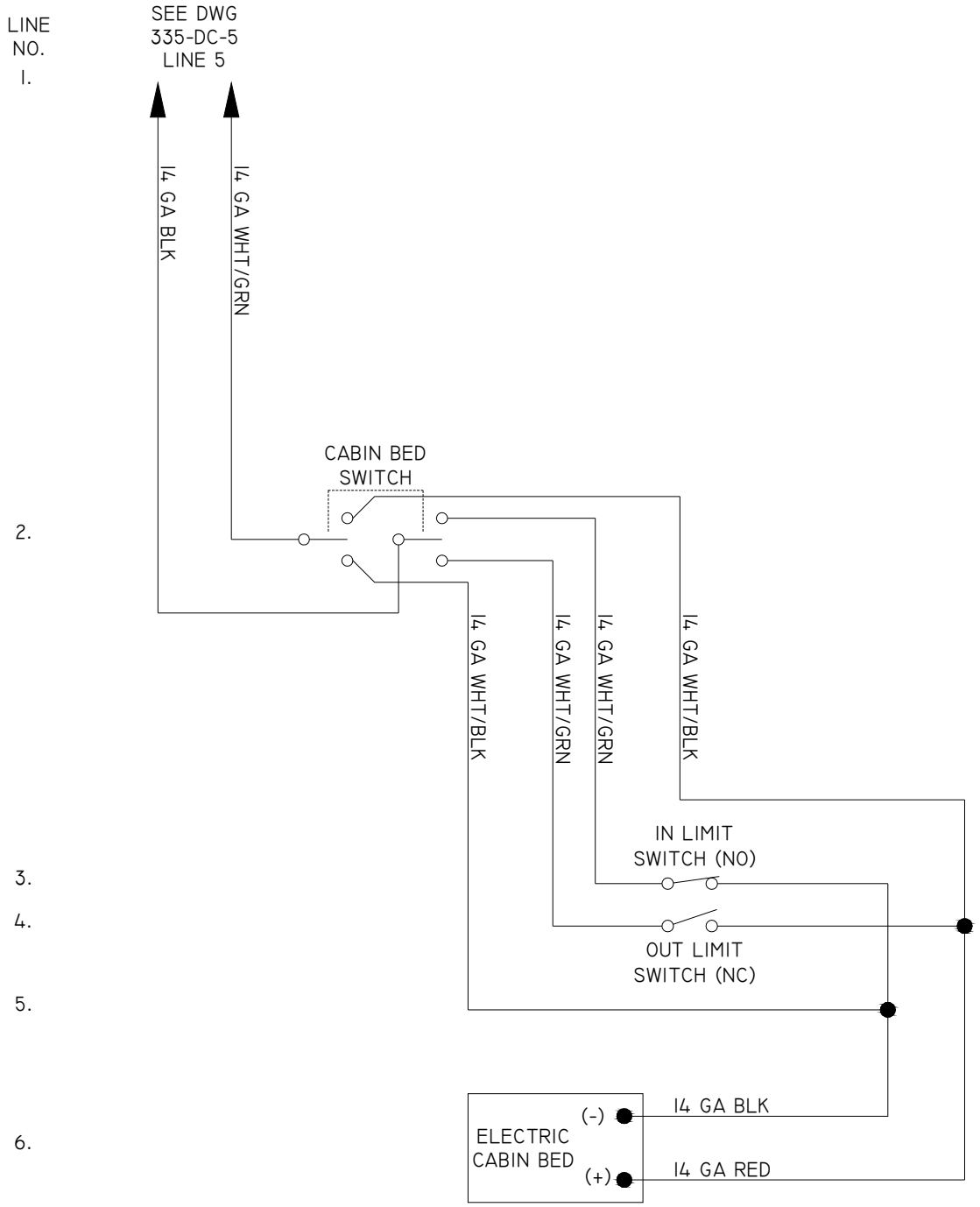


NOTES:

1) BED CIRCUIT SHOWN IN FULL OUT POSITION
2) BOTH LIMIT SWITCHES ARE CLOSED WHEN BED IS IN BETWEEN LIMITS
3) SEE LAYOUT DRAWINGS FOR COMPONENT LOCATIONS

# Electric Cabin Berth (In Position) Diagram

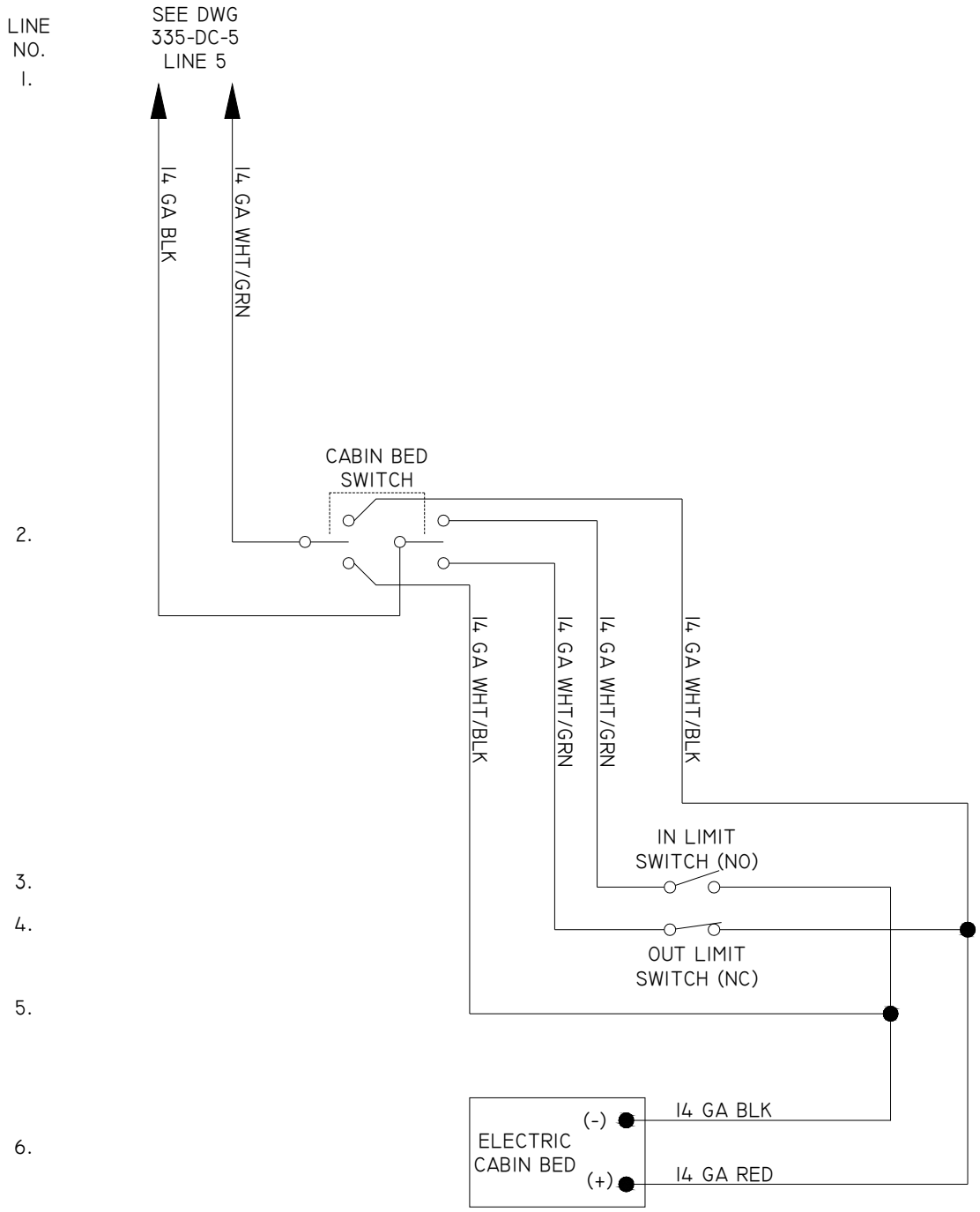


NOTES:

1) BED CIRCUIT SHOWN IN FULL IN POSITION
2) BOTH LIMIT SWITCHES ARE CLOSED WHEN BED IS IN BETWEEN LIMITS
3) SEE LAYOUT DRAWINGS FOR COMPONENT LOCATIONS

## *12V DC Electrical Diagram*

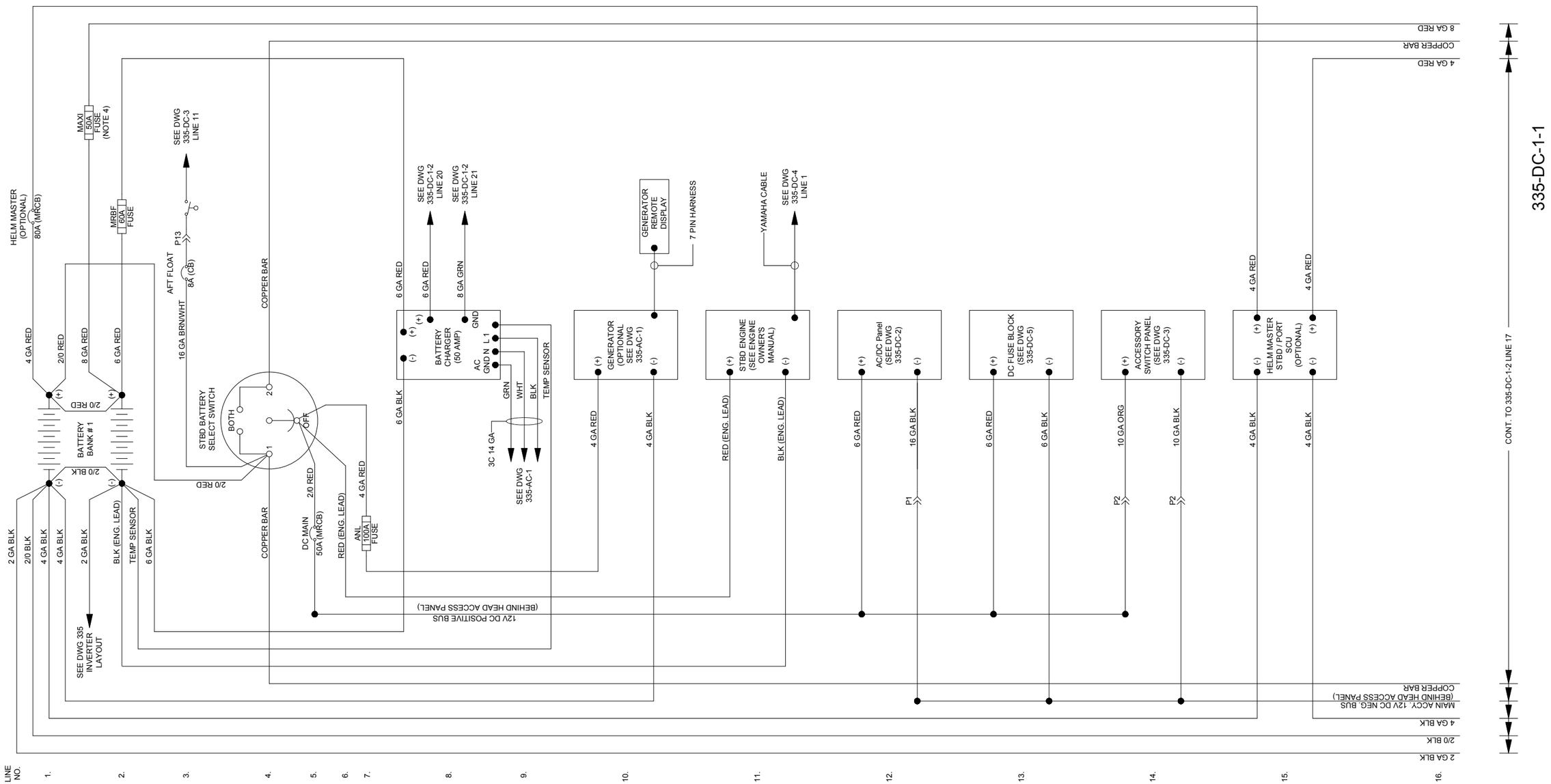


NOTES:

1) ○— INDICATES MULTI-CONDUCTOR CABLE
2) SEE LAYOUT DRAWINGS FOR COMPONENT LOCATIONS
3) POWER ASSIST PUMP AND ALL WIRING IS DELETED WITH HELM MASTER OPTION
4) 50 AMP MAXI FUSE CHANGES TO 100 MRCB IF THE BOAT IS EQUIPPED WITH V6 ENGINES

# 12V DC Electrical Diagram

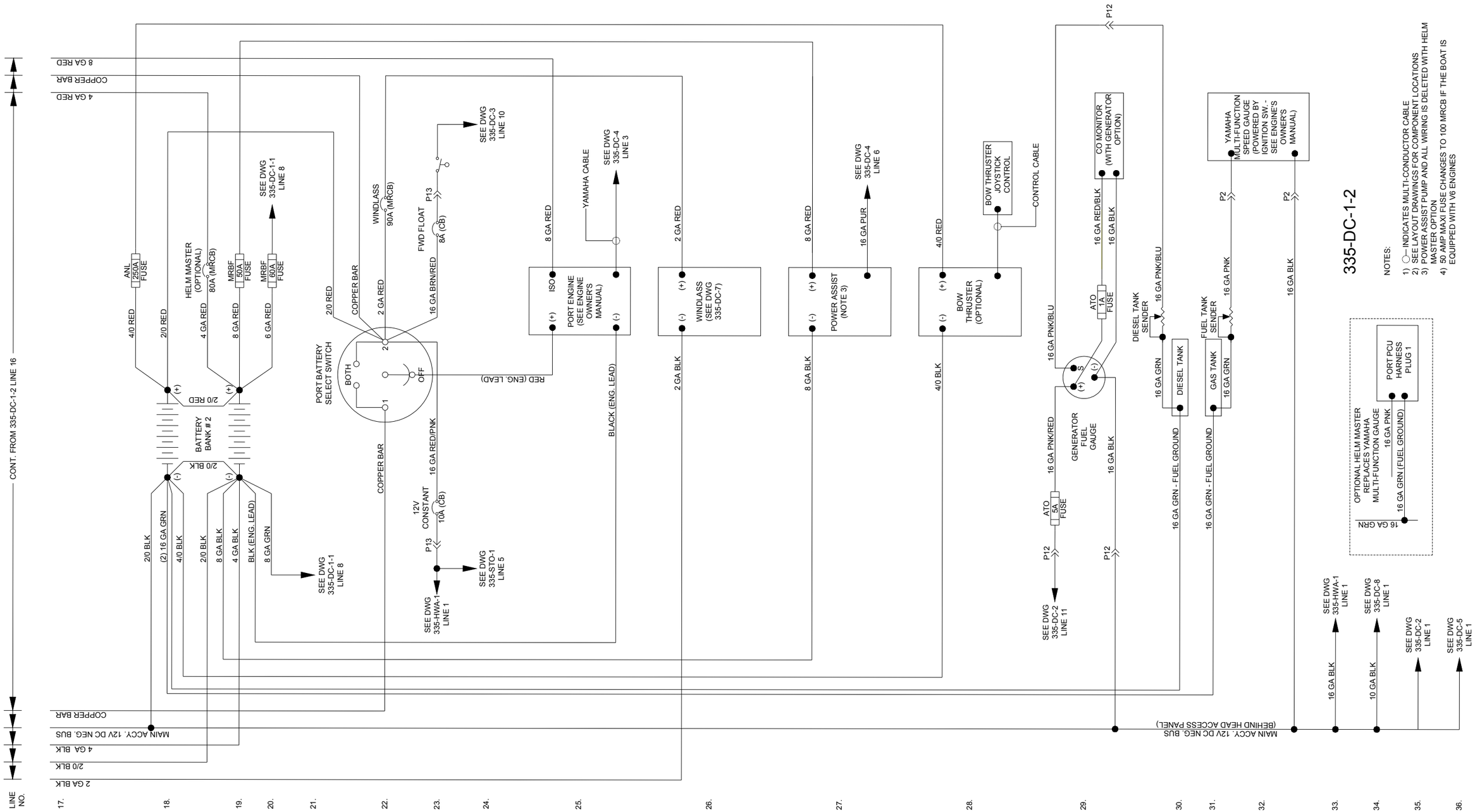

# Chapter 9: Limited Warranty

## REGISTRATION OF PURCHASE:

The "Federal Boat Safety Act of 1971" requires all boat manufacturers to maintain a record of all first retail purchasers and their current addresses for the purpose of notification in case of defective parts or equipment or in case of non-compliance with standards or regulations set forth by this act. Under the act, failure to complete and return your factory warranty card for our records will waive your right to notification of defect and/or repair at manufacturer's expense

## FIVE YEAR HULL TRANSFERABLE WARRANTY

Grady-White warrants to the original retail purchaser of each new Grady-White boat that, under normal use, any structural hull defects covered by the warranty and reported within five (5) years from the date of delivery to the original retail purchaser will be repaired free of charge at Grady-White's sole discretion at either the Grady-White factory in Greenville, North Carolina, at an authorized Grady-White dealer location or other Grady-White approved location as elected by Grady-White. A structural hull defect is defined as a substantial defect in the boat's hull which causes the boat to be unsafe or unfit for use under normal operating conditions. Expenses for hauling out and transportation to and from the point of repair will be the responsibility of the owner. The owner will also be responsible to remove and reinstall, at their own expense, all outboard engines, (if directly related to damage in question), as well as any and all personal effects and electronics equipment. All repairs are subject to prior written authorization by Grady-White Boats, Incorporated. **NO BOAT IS TO BE SENT TO THE GRADY-WH1TE FACTORY AND NO REPAIRS MADE WITHOUT SUCH WRITTEN AUTHORITY.**

The Five Year Structural Hull Warranty is transferable to the second and subsequent owners for the remainder of the five (5) years from the date of delivery to the original purchaser. There is no fee involved in the transfer of warranty to the new owner. The Grady-White Boats Transferable Warranty Form must be completed and returned to Grady-White at the time of sale. Upon receipt of this form, Grady-White will update its records to reflect the new ownership and warranty coverage will be provided for the remainder of the five (5) years.

## ONE YEAR MATERIAL AND WORKMANSHIP WARRANTY

Grady-White further warrants to the original retail purchaser of each Grady-White boat that under normal use, defects in workmanship and material covered by the warranty and reported within one (1) year from the date of delivery to the original retail purchaser will be repaired or replaced free of charge at Grady-White's sole discretion at Grady-White's factory in Greenville, North Carolina, or at an authorized Grady-White dealer as elected by Grady-White. Expenses for hauling out and transportation to and from the point of repair will be the responsibility of the owner with all repairs subject to prior written authorization. **NO BOAT OR PART THEREOF IS TO BE SENT TO THE GRADY-WHITE FACTORY AND NO REPAIRS MADE WITHOUT SUCH WRITTEN AUTHORITY.**

Grady-White Boats, Inc. reserves the right to improve its product through changes in design or material without obligation to incorporate such changes on boats built prior to the implementation of respected change(s).

**Exclusions:**

This warranty specifically does not include the following:

- Damage caused by abuse, negligence, vandalism, lack of maintenance, improper storage, or accident.
- Any statements, representations, or warranties given by dealer or other third persons other than those provided within this warranty.
- Any unit which is part of a rental fleet, used for racing, or commercial purposes.
- Any unit which has been salvaged or declared a total loss.
- The following consequential damages: a) loss of time; b) inconvenience; c) towing charges; d) expenses for travel, lodging, telephone, and gasoline; e) loss or damage to personal property or loss of revenue; f) loss of use of the boat; g) storage fees for the boat.
- Equipment or accessories which are not installed by Grady-White or which carry their own individual warranties, including, but not limited to engines, outdrives, propellers, controls, steering, bilge pumps, electronics and any other part expressly warranted by the manufacturer thereof.
- Damage or deterioration of cosmetic surface finishes including gel coat cracking, crazing, blistering, discoloration, chalking or fading, chrome, plated or painted metal, aluminum and stainless steel finishes, plastics or acrylic materials, windshields, glass breakage, all vinyl upholstery and canvas, instruments and gauges, and leakage around windshields, windows, hatches, and other apertures.
- Failure of the owner to use, maintain, or store the boat as specified in the Grady-White owner's manual; and any other failure to provide reasonable care and maintenance. Normal wear and tear maintenance items are excluded from warranty coverage including but not limited to filters, bulbs, batteries, and bungees (refer to owner's manual for additional maintenance items).
- Any Grady-White boat which has been altered or modified from Grady-White factory specifications, including penetration of the hull by anyone other than Grady-White or a Grady-White authorized dealer following Grady-White factory specified procedures.
- Any failure or defect resulting from a previous repair not authorized by Grady-White.
- Any boat which has been overpowered according to the maximum Grady-White recommended engine horsepower specifications on the capacity plate affixed to the boat.

### WARRANTY CLAIM PROCEDURES

Upon the discovery of a defect, the owner is to promptly contact the Grady-White dealer from whom the original retail purchaser purchased the boat who will affect the corrective action under this warranty upon prior written authorization from Grady-White Boats, Incorporated.

THESE WARRANTIES ARE EXPRESSLY MADE IN LIEU OF ALL OTHER WARRANTIES. DURATION OF ANY IMPLIED WARRANTY OF MERCHANTABILITY OR FITNESS FOR A PARTICULAR PURPOSE OR OTHERWISE SHALL BE LIMITED TO AND COINCIDENT WITH THE DURATION OF THESE EXPRESSED WARRANTIES.

THIS WARRANTY SHALL NOT BE VALID UNLESS THE FACTORY WARRANTY POSTCARD IS PROPERLY EXECUTED AND MAILED WITHIN 10 DAYS OF THE PURCHASE OF YOUR GRADY-WHITE BOAT.

GRADY-WHITE

# *TRANSFERABLE WARRANTY FORM*

**(Not for original owner use *)**

*** Note: For second owner's use in transferring remainder of 5 year hull structural warranty.**

***Please complete the following:***

***Hull ID:*** _____

***Boat Model:*** _____

***Name:*** _____

***Address:*** _____

***City:*** _____ ***State:*** _____ ***Zip:*** _____

***Home Phone:*** _____ ***Work Phone:*** _____

***Email Address:*** _____

***Last 4 digits of your Social Security Number (to be used for customer identification number):*** _____

***Dealership or Previous Owner:*** _____

***Date Purchased:*** _____

## About Your Boat

1. ***What type of power is your boat equipped with?*** ☐ Single OB ☐ Dual OB ☐ Inboard/Outboard
2. ***What engine brand does your boat have?*** ☐ Johnson ☐ Mercury ☐ Evinrude ☐ Yamaha ☐ Volvo ☐ Other
3. ***Engine horsepower (total if twin power)*** _____
4. ***Is your new Grady-White the first boat you've ever owned?***

   ☐ Yes → Please skip to question 5a
   ☐ No → ***Please tell us about your previous boat:***
   ***Builder's name:*** _____ ***Length:*** _____
   ***Why did you sell this boat?*** _____

***5a. In which of the following ways do you use your Grady-White? (Please mark all applicable in column A.)***

***5b. In which <u>one</u> way do you use your Grady-White <u>most often</u>? (Please mark <u>one</u> only in column B.)***

| | **A**<br>Ways<br>Use | **B**<br>One Way Use<br>Most Often |
|---|---|---|
| Casual cruising | ☐ | ☐ |
| Casual fishing | ☐ | ☐ |
| Serious offshore fishing | ☐ | ☐ |
| Socializing/entertaining | ☐ | ☐ |
| Watersports | ☐ | ☐ |
| Other: | ☐ | ☐ |

**6. *Which of the following most influenced your selection of a Grady-White boat? (Please pick three or fewer reasons.)***

***About Grady-White***

- Grady-White's overall reputation ☐
- Previous experience with a Grady-White ☐

***About the boat itself***

- Cockpit layout ☐
- Hull design/ride ☐
- Resale value ☐
- Safety/seaworthiness ☐
- Styling ☐
- Other: _____ ☐

**7. *How would you rate the overall value received from your Grady-White?***

☐ Excellent ☐ Good ☐ Fair ☐ Poor

**8. *How likely would you be to consider buying each of the following brands of boats in the future?***

| | Definitely Consider | Might Consider | Would Not Consider | Don't Know |
|---|---|---|---|---|
| • Boston Whaler | ☐ | ☐ | ☐ | ☐ |
| • Century | ☐ | ☐ | ☐ | ☐ |
| • Grady-White | ☐ | ☐ | ☐ | ☐ |
| • Hydra-Sport | ☐ | ☐ | ☐ | ☐ |
| • Mako | ☐ | ☐ | ☐ | ☐ |
| • Pursuit | ☐ | ☐ | ☐ | ☐ |
| • Searay | ☐ | ☐ | ☐ | ☐ |
| • Wellcraft | ☐ | ☐ | ☐ | ☐ |
| • Other:_____ | ☐ | ☐ | ☐ | ☐ |

**9. *Which of the following magazines do you subscribe to or read often?***

☐ Boating ☐ Fisherman Magazine ☐ Motorboating & Sailing ☐ Sportfishing
☐ Boating World ☐ Florida Sportsman ☐ Power & Motoryacht ☐ Wall Street Journal
☐ Boats U.S. ☐ Offshore ☐ Saltwater Sportsman ☐ Other _____

**10. *What is your age?*** ☐ Under 25 ☐ 25-34 ☐ 35-44 ☐ 45-54 ☐ 55-64 ☐ 65 or older

**11. *Which of the following best describes your educational background?***

☐ Some High School ☐ Some College or Technical ☐ Some Post-Graduate Work
☐ High School Graduate ☐ College Graduate ☐ Post-Graduate Degree or More

**12. *What is your total annual household income?***

☐ Under $30,000 ☐ $75,000 - $99,999 ☐ $150,000 - $174,999
☐ $30,000 - $49,999 ☐ $100,000 - $124,999 ☐ $175,000 - $199,999
☐ $50,000 - $74,999 ☐ $125,000 - $149,999 ☐ $200,000 or more

**13. *Does your family own a second home, where you most often do your boating?*** ☐ Yes ☐ No

***If yes, where is your second home?*** _____ _____
City,State

***Thank you for completing this questionnaire.***
***When we receive this information, you will automatically begin receiving our AnchorLine Newsletter.***
*Please return this form to:*
Grady-White Boats, Customer Relations Dept., P.O. Box 1527, Greenville, NC 27835-1527