GRADY-WHITE BOATS

Dear Grady-White Owner:

Welcome aboard!

Buying and owning a boat is a very special experience. Of all the many products you'll ever own we want your Grady-White experience to be the absolute best. That means providing the descriptions, explanations and technical support that you need to enjoy your Grady-White with confidence and security.

Your Grady-White exceeds all US Coast Guard safety standards and is built to standards certified by the National Marine Manufacturers Association (NMMA). Best of all, your boat is built to Grady-White standards—standards that have served our owners through some truly extraordinary conditions since our first models built in 1959.

The seaworthiness and safety of your Grady-White is highly dependent on the operation, maintenance and care of your boat, so please read this manual thoroughly and keep it around for reference. If you need further explanation or "hands-on" help, don't hesitate to ask the people at your Grady-White dealership; they have experience with the systems and operations of your boat. If for any reason you need additional help, please feel free to call us at the factory. We sincerely want to provide you with the help and information that will make your Grady-White experience delightful.

Thanks for choosing a Grady-White. All of us at the factory and at your dealership are dedicated to earning your confidence in Grady-White Boats. Again, welcome aboard.

Sincerely yours,

Kris Carroll

President

Grady-White Boats, Inc.

Grady-White Boats, Inc.
5121 Martin Luther King Jr. Hwy, Greenville, NC 27834 • P.O. Box 1527 • Greenville, NC 27835-1527
Tel: 252-752-2111 • Fax: 252-752-4217 • http://www.gradywhite.com

Chapter 1: Consumer Information

Owner's Packet 1-1
Warranty Information 1-1
Dealer's Responsibilities 1-1
Consumer Responsibilities 1-2
Hazard Warning Labels 1-3

Chapter 2: Safety

Minimum Required Safety Equipment 2-1
Additional Recommended Equipment 2-1
Registration Numbers 2-2
Emergency Stop Switch 2-2
Emergency Information 2-2
Boating Safety 2-3
Certification 2-4
Loading Capacity 2-4
Designated Occupant Positions 2-6
Carbon Monoxide 2-7
Propeller Safety 2-8
Watersport Safety 2-8
Suggested Boating Classes And Reading Material 2-8

Chapter 3: General Information

Fueling 3-1
Environmental Protection Agency 3-2
Pollution Regulations 3-2
  Discharge of Oil or Hazardous Substances 3-2
  Disposal of Plastics or Garbage 3-2
Trailering 3-2
Predeparture 3-3
Casting Off and Approaching The Dock 3-3
Reboarding Ladder 3-3
Anchoring 3-4
Towing 3-4
Shallow Water 3-5
General Information On Boat Handling 3-5
Twin and Triple Engine Boats 3-6
Commonly Used Nautical Terms 3-7

Chapter 4: Performance

Performance Factors 4-1
Engine Efficiency 4-1
Weather Conditions 4-1
Load Distribution 4-1
Marine Growth 4-1
Trim 4-1
Propeller 4-2
Propulsion System – Outboard 4-2
Steering 4-3
Throttle/Shift Controls 4-3

Chapter 5: Instrumentation and Switches

Yamaha Instrumentation Panel 5-1
Yamaha Command Link Display (Mechanical Engines) 5-1
Yamaha Command Link CL7 Display (Digital Engines & Helm Master™) 5-2
Yamaha Helm Master™ 5-4
Switch Panel 5-5

Chapter 6: Maintenance and Service

General 6-1
Exterior Fiberglass Finish 6-1
Maintenance 6-1
Cleaning 6-1
Finish/Waxing 6-2
Repairing 6-2
Bottom Paint 6-3
Grady Drives 6-3
Canvas 6-4
Maintenance of Canvas 6-4
Snaps and Zippers 6-4
Vinyl 6-4
Upholstery 6-5
Polyethylene/Acrylic/Vinyl 6-5
Scuppers 6-5
Caulking/Gasket 6-5
Hardware/Stainless Steel Rails 6-6
Hardware Mounting 6-6
Aluminum Components 6-6
Fuel System 6-7
Batteries 6-9
Inverter Batteries 6-10
LED Lighting 6-10

180, 192-236, 255-285, 306, 307 DC Accy Wiring Color Fuse/Breaker 6-11

Chapter 7: Winterization and Storage

General 7-1
Boat Storage 7-1
Cleaning And Lubricating 7-2
Draining And Water System 7-2
Head System 7-3
Batteries 7-3
Engines 7-3
Fuel System 7-3
Storage Checklist 7-3
Getting Boat Out After Storage 7-4
Prior To Launching 7-4
After Launching 7-4

Chapter 8: Gulfstream 232

Specifications 8-1
Operation Of Standard Features 8-1
Helm Switch Panel 8-1
Auxiliary Fuse Block 8-3
Accessory Outlet - 12 Volt 8-3
Battery Select Switch 8-3
Bilge Pump/Float Switch 8-4
Bilge Pump Location 8-4
Carbon Monoxide Detector 8-4
Cockpit Shower 8-5
Compass 8-5
Engine Flushing System 8-5
Freshwater System 8-6
Hardtop 8-6
Head 8-6
Marine Head (With Hand Pump) Operation 8-6
Electric Marine Head Operation 8-7
Emptying Marine Head Holding Tank 8-7
High Bilge Water Alarm 8-7
Livewell - Raw Water 8-8
Main Circuit Breaker 8-9
Seacocks 8-9
Stereo 8-9
Trim Tabs 8-9
Trim Tab Pump Location 8-10

Washdown - Raw Water 8-11
Operation Of Optional Features 8-12
Battery Charger 8-12
Outriggers 8-12
Power Assist Hydraulic Steering 8-13
Shore Power 8-13
Connecting The Shore Power 8-13
Disconnecting The Shore Power 8-13
Windshield Washer Solenoid 8-14
Safety Labels and Location 8-15

Chapter 9: Limited Warranty

Registration Of Purchase 9-1
Five Year Hull Transferable Warranty 9-1
One Year Material And Workmanship Warranty 9-1
Warranty Claim Procedures 9-2

CHAPTER 1: CONSUMER INFORMATION

Owner's Packet

Your Grady-White has many features and accessories that have existing printed material provided by the various equipment manufacturers. This information is compiled in a package that we will reference throughout this manual as an "Owner's Packet." This Owner's Packet includes a Grady-White Owner's Manual and Engine Manual to advise on operation, service, specifications, maintenance, warranty, and other useful facts. While reading your Grady-White manual, you will find other technical literature referenced as resources for detailed information. The Owner's Packet will also consist of operation guides, informative labels, and product warranties you will need to be acquainted with. Your Owner's Packet can also be used to retain instructions and data compiled on additional equipment and accessories installed after delivery. To the extent that any other information in the Owner's Packet is inconsistent with the Grady-White owner's manual for your boat, the owner's manual takes precedence.

Sportfish, Cruisers, Yachts Owner's Manual, a book published by the National Marine Manufacturer's Association (NMMA), has been included with your Owner's Manual as a supplement. This publication will be referenced in your Grady-White Owner's Manual to present additional instructions and information on basic boating.

Warranty Information

The Grady-White warranty is located in the last chapter of this manual. **Upon the purchase of your new Grady-White Boat, the dealer will submit the required warranty information to the factory.** For questions regarding your warranty please contact your dealership.

Dealer's Responsibilities

Throughout the fabricating and assembly processes, your Grady-White has undergone a series of strict inspections. Subsequent to the final factory overview, your dealer must perform additional pre-delivery checks and approve your Grady-White for delivery.

Dealer Responsibilities Include Providing The Following:

- An orientation of the general operation of your Grady-White.
- Submitting the required warranty information to Grady-White Boats to validate the warranty.
- An explanation of safety issues regarding the use of containment systems and components.
- A complete Owner's Packet containing literature and information regarding your Grady-White and its separate warranted products' operation, installation, and maintenance instructions.

- A review of all warranties for engines and accessories that are separate from or in addition to the Grady-White warranty.
- Guidance on acquiring local and out of area service during and out of warranty periods.

Consumer Responsibilities

The following are responsibilities of the Grady-White owner:

- Read and understand the express limited warranty.
- Study in detail all literature and instructions enclosed, and use all equipment in accordance.
- Examine the boat and confirm all systems are working suitably at the time of accepting delivery.
- Render proper maintenance and periodic servicing of the boat in accordance with suggestions in the Owner's Manual and Packet.
- Return the boat to the selling dealer for an engine inspection. Refer to the engine's owner's manual for the proper maintenance schedule.

Grady-White Boats has a permanent record of your boat which is retained under its "**H**ull **I**dentification **N**umber" (HIN). Data regarding equipment and accessories, as well as dealer/shipping information is documented. When contacting your dealer concerning warranties or service, please have all relevant information such as serial numbers (HIN) and model number available.

The "**H**ull **I**dentification **N**umber," located on the starboard side of the transom, is a significant source of identification and must be noted in all correspondence and orders. Failure to include the HIN only creates delay.

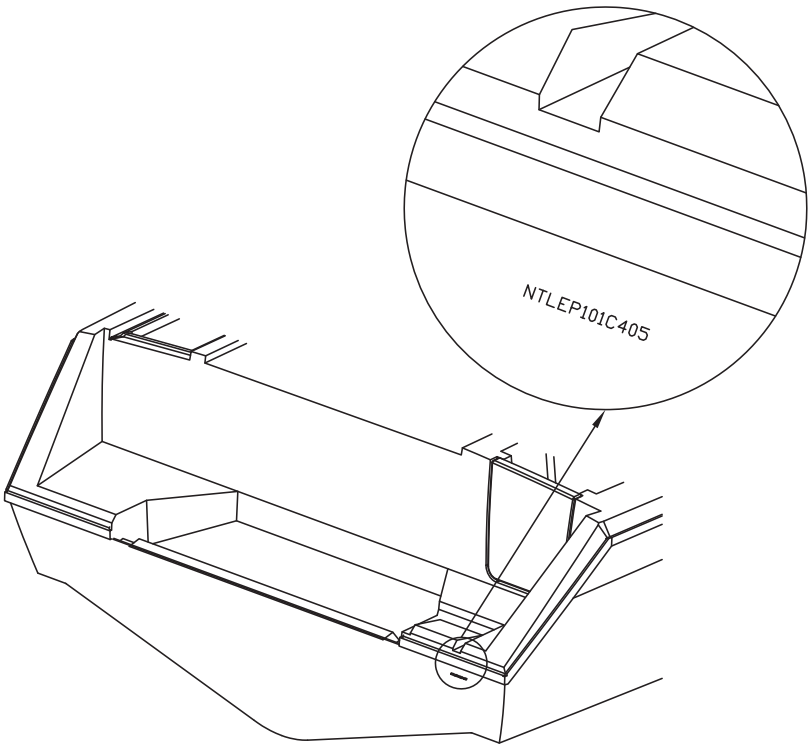

Hazard Warning Labels

The hazard warning labels shown below are applied throughout this manual to alert the customer of potentially dangerous situations that can lead to death, personal injury, and/or product damage. We urge you to observe these warnings and comply with all safety recommendations.

⚠ DANGER
This symbol alerts you to imminently hazardous situations which WILL cause severe personal injury or death if the warning is ignored.

⚠ WARNING
This symbol alerts you to potentially hazardous situations or unsafe practices that COULD result in severe personal injury or death if the warning is ignored.

⚠ CAUTION
This symbol alerts you to potentially hazardous situations that MAY result in minor personal injury or cause product or property damage if the warning is ignored.

NOTICE
This symbol calls attention to installation, operation, or maintenance information which is important for proper operation, but is not hazard related.

CHAPTER 2: SAFETY

Minimum Required Safety Equipment

The US Coast Guard (USCG) requires that every boat have specific equipment on board. Check with local regulations on mandatory equipment apart from the list of Coast Guard requirements. See *Sportfish, Cruisers, Yachts Owner's Manual*, page 23, for details on the following minimum required safety equipment.

- **Fire Extinguisher**
  Boats should be equipped with marine approved fire extinguishers.
- **Personal Flotation**
  All passengers must have an USCG approved personal flotation device (PFD). The Coast Guard requires children under 13 years old and not within an enclosed cabin below decks to wear a PFD on a boat that is underway. The laws of your state may be more stringent. It is your obligation to know and comply with the PFD laws and regulations applicable *in the states in which you operate*.
- **Children and non-swimmers are advised to wear a PFD at all times.**
- **Sound Signaling Device (Horn, Bell Or Whistle)**
  Your Grady-White is equipped with a horn that meets USCG requirements.
- **Visual Distress Signals**
  USCG approved visual distress signals are required on U. S. waters. See page 42 of the pamphlet *Sportfish, Cruisers, Yachts Owner's Manual* enclosed with this manual for more information.
- **Lighting**
  Grady-White boats are equipped with navigational lights that meet requirements for recreational vessels for inland and international waters.

Additional Recommended Equipment

In addition to the required safety equipment, there are additional items that will provide an extra margin of safety and convenience for you and your passengers while boating. For an extended list of basic gear, tools and spare parts, reference page 24 of the pamphlet *Sportfish, Cruisers, Yachts Owner's Manual* enclosed with this manual.

Keep tools and spare parts in good condition. Replace parts removed from the spare parts kit. Most importantly, use US Coast Guard approved or marine certified parts where applicable. Conditions found requiring corrective action should be worked on by a qualified repairman.

Registration Numbers

Federal and State laws require a powerboat to be registered in the State where it is primarily used. Registration numbers and validation stickers must be displayed according to regulations.

The registration certificate must be on board when boating. The boat serial number or Hull Identification Number (HIN, page 1–2) is required on the registration form. The HIN is located on the upper right hand corner of the transom, and is the most important identifying factor. The HIN should be included in all documents and correspondence to provide you timely service.

Emergency Stop Switch

All Grady-Whites are equipped with an emergency stop switch. This is a safety feature that if used properly will shut the engine(s) down if the operator leaves or falls from the helm position. The ignition shutdown system includes a shut-off switch, switch clip, lanyard and lanyard clip. The lanyard clip must be attached to the operator. If a situation arises where the boat should stop, a pull on the cord to release the clip from the shut-off switch will shut down the engine(s). To reset the emergency stop switch, simply reinstall the switch clip. The responsibility to use the emergency stop switch rests with the owner/operator. See page 82 in *Sportfish, Cruisers, Yachts Owner's Manual*.

Emergency Information

While boating, dangerous situations may develop. You should prepare yourself on how to cope with them whether they happen aboard your vessel or someone else's. Anticipate and plan for specific situations such as fire, man overboard, collision, etc. to give you the confidence and ability necessary to handle an emergency. The key is to remain calm. For emergency procedures, see Section 4 in *Sportfish, Cruisers, Yachts Owner's Manual*.

- **Rendering Assistance**
  The owner or operator of a vessel is required by law to render all practical or necessary assistance to any person or vessel affected by collision, accident or casualty. **However, you are not required to endanger your vessel or passengers to render assistance.**
- **Accident Reporting**
  Report all boating accidents to your local authorities. Federal regulations require boat operators involved in an accident to submit a written report within 48 hours. **In the event of death or disappearance, notification is required immediately** by phone or radio in addition to the written report. These reports can be submitted to the State Boating Law Administrator. Forms can be obtained through the USCG, local harbor patrol offices, sheriff, and police stations.
- **Lightning Precautions**
  This awareness is included to ensure the safety of the owner and passengers. Always be mindful of the weather! When a lightning storm advances, certain safety precautions should be taken. Dock the boat and seek shelter on land. If this is not possible, seek refuge inside the boat until the storm has passed. **Stay out of the water!** Lightning will seek a ground when it strikes and may pass through metal components if it hits your boat. For this reason, avoid contact with metal parts of the boat under these conditions.

Boating Safety

Safety is an important aspect of boating. Your safety as well as the safety of your passengers and vessel is your responsibility. The following precautions and the ones mentioned in section 1 of *Sportfish, Cruisers, Yachts Owner's Manual* will add to you and your passengers' boating safety and pleasure.

- Before operating your Grady-White **read and study all operation and maintenance manuals**. It is important that you fully understand how to use your boat. Contact your Grady-White dealer for questions. Proper use and service will insure quality performance and longevity of your boat, and help ensure your safety, as well as the safety of your passengers.
- A written float plan left with a **responsible** person can serve as valuable information should you not return as scheduled. Upon returning, your primary responsibility is to notify the person of your return.
- **Never** operate or allow anyone to operate your boat while under the influence of drugs or alcohol.
- **Individuals under the age of 16 should not be allowed to operate your boat. Inexperienced drivers should have constant and direct supervision.**
- Instruct at least one passenger on the fundamentals of basic boating and safe operation in the event of an emergency.
- While boating, passengers should be located in a safe position. Use hand holds and rails for steadiness. Do not allow bow, transom or gunwale riding. The captain is ultimately responsible for their passenger's safety.
- Keep your boat speed under control. Respect for other boaters and those on shore are common courtesies. The boat's operator is responsible for injury or damage caused by the boat or the wake. Your wake could swamp a smaller craft and endanger its passengers. Stay alert for posted **"No Wake Zones"**.
- Become familiar with the handling personality and limitations of your boat.
- **Never allow swimmers/skiers to enter or exit the boat with engine(s) running**. A shift lever in neutral could become engaged accidentally. Also, exhaust fumes from the outboard engine(s) contain carbon monoxide gas. These fumes may concentrate in this area. *See more information on "Carbon Monoxide" on page 2-7*.
- Obtain information and a chart for new areas when possible.
- Clean water and air are responsibilities for all persons. Use litter containers on board and dispose of refuse properly. *See "Pollution Regulations" on page 3-2*.
- Know and obey the "Rules of the Road". See *Sportfish, Cruisers, Yachts Owner's Manual*, beginning on page 25, for a better understanding of right of ways, signals and waterway markers.

- **Inclement Weather**
  On the water, the weather can change rapidly. Always be mindful of changing weather and sea conditions as these can impact the safe operation of your vessel, and the safety of your passengers.

Certification

This label means your Grady-White is certified by the National Marine Manufacturers Association (NMMA). With this tag, you are assured the fuel system, electrical system, navigation lighting, ventilation, steering and other design elements are not only in compliance with the US Coast Guard regulations, but also meet the more stringent standards of the NMMA. The NMMA is a national trade organization serving all elements of the recreational boating industry including manufacturers of boating equipment. With this tag, you can have confidence in the safety of your boat.

This label means that Grady-White has designed and built your boat to the ABYC standard H-8, buoyancy in the event of swamping. Basic flotation is defined as having enough foam in the boat to create buoyancy and prevent sinking under swamped conditions.

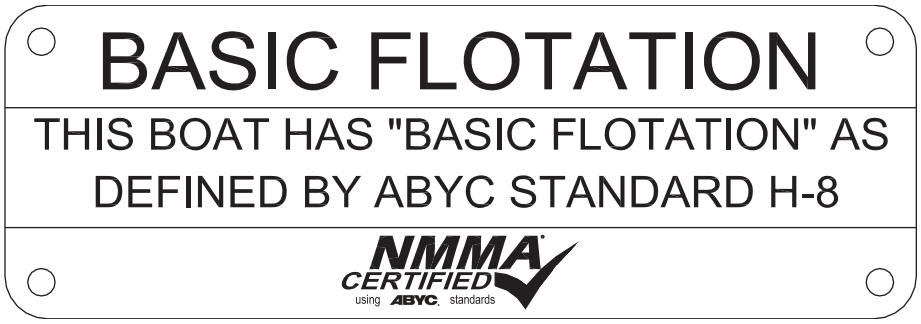

Loading Capacity

Though overloading is a primary cause of many boating accidents, improper loading is equally hazardous. Boaters should know the amount of weight on board and evenly distribute the weight within the boat.

In the helm area you will find a NMMA capacity information tag indicating the maximum weight and person capacity for your boat. This tag will also designate the maximum horsepower limit for an outboard. You and your passengers will be in jeopardy and your warranty void if any of these stipulations are exceeded. The capacity plate indicates maximum load under normal conditions. The capacity plate does not release the operator from the accountability of rational judgment. Allow yourself an extra margin in rough waters and adverse conditions by reducing the boat's capacity. Maintain a watch on weather conditions.

MAXIMUM CAPACITIES

10 PERSONS OR 1650 LBS.

3100 POUNDS, PERSONS, MOTOR, GEAR

400 HORSEPOWER MOTOR

THIS BOAT COMPLIES WITH U.S. COAST GUARD SAFETY STANDARDS IN EFFECT ON THE DATE OF CERTIFICATION

MEETS U.S. EPA EVAP STANDARDS USING CERTIFIED COMPONENTS

MANUFACTURER: **GRADY-WHITE BOATS, INC.**

MODEL: **GULFSTREAM 232** **GREENVILLE, NC**

DESIGN COMPLIANCE WITH NMMA REQUIREMENTS IS VERIFIED.
MANUFACTURER RESPONSIBLE FOR PRODUCTION CONTROL.

NMMA CERTIFIED using ABYC standards

NATIONAL MARINE
MANUFACTURERS ASSOCIATION

Designated Occupant Positions

The number of designated occupant positions matches the persons capacity label of your boat. These areas may be standing or seating positions that are appropriately sized and designed to be safely occupied at boat speeds in excess of 5 mph (4.3 knots).Your boat's designated occupant positions are indicated by an X on this boat layout diagram. Remain in these areas and use the available grabrails or handholds while the boat is in motion to avoid injury or falling overboard.

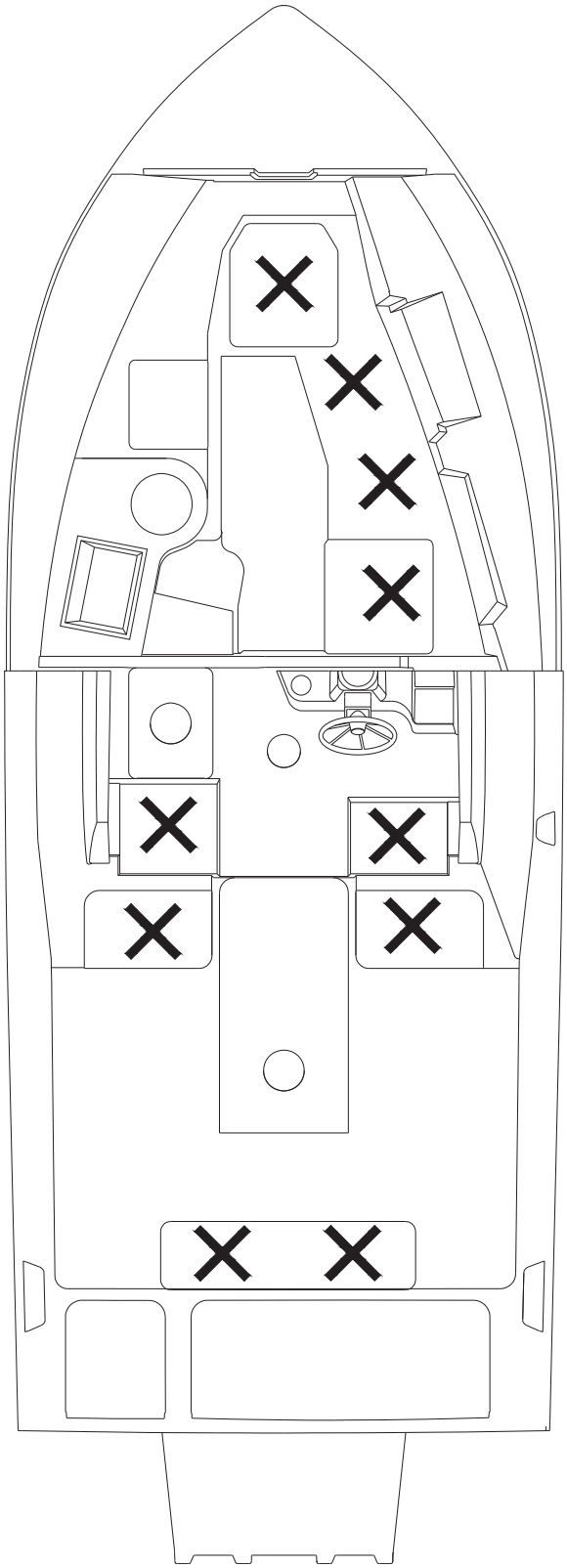

Carbon Monoxide

WARNING

CO is produced by all combustion engine(s) and generator sets.
Avoid brain damage or death from carbon monoxide.
Keep cockpit and cabin areas well ventilated.
Avoid blockage of exhaust outlets.
Signs of exposure include headache, nausea, dizziness and drowsiness.

Carbon Monoxide, commonly written CO, is a colorless, odorless gas emitted from any boat's exhaust. The gas is similar in weight to the air we breathe. Therefore, it cannot be expected to rise or fall, but will accumulate in confined spaces.

Carbon monoxide is **poisonous**, and potentially **fatal** if breathed over an extended period of time. Symptoms of CO poisoning include dizziness, nausea, headache, sleepiness, vomiting, throbbing in the temples, muscular twitching, and an inability to think clearly. **If you or anyone else experience these symptoms, immediately get away from fumes and into an area where plenty of fresh air can be consumed. If any symptoms from above persist, seek medical attention.**

Carbon monoxide can accumulate in cabins and under enclosures and canvas. Maintain access to fresh air when occupying these areas with the engines or generator running.

Outboard engine exhaust fumes contain carbon monoxide. These fumes may concentrate at the motorwell area. Do not board your vessel at the transom ladder with the engine(s) running. Also, do not occupy the motorwell area with the engine(s) running.

Operators need to be aware of the influence of other boats on their vessel as well as the effects they have on neighboring crafts. Of primary concern is the operation of an auxiliary generator with boats moored along side each other. This situation creates an atmosphere which is filled with CO, and extremely dangerous. If your CO detector alarm sounds, indicating CO is present, immediately remove yourself from the area and go to a location with fresh air. Shut off sources of CO such as engines and generators and open doors and windows to ventilate the affected area if possible. If you or anyone aboard your vessel experiences persistent symptoms of CO poisoning seek medical attention right away.

WARNING

BE AWARE of the significance your exhaust may have on other vessels. Likewise, BE AWARE that the operation of other vessels' equipment may influence the carbon monoxide concentration on YOUR vessel.

⚠ WARNING

Exhaust fumes from engine(s) contain (CO). Boats with canvas deployed are more likely to collect exhaust fumes. Avoid brain damage or death from (CO). Keep cockpit and cabin areas well ventilated. Signs of exposure include headache, nausea, dizziness and drowsiness.

Propeller Safety

⚠ WARNING

Contact with propeller(s) can cause death or serious bodily injury. All engines should be off at all times when any swimmer is at or in the vicinity of the stern area or engine(s). When swimmers are disembarking or reboarding the boat, it is the operator's responsibility to ensure that the movement of the boat in the water or waves does not pose an unreasonable risk of personal injury.

Placing the engine(s) in neutral is not sufficient to protect swimmers in the water from the possibility of accidental propeller strike injury. There are many cases of reported injuries when engines were either thought to be in neutral but were not, or when engines were accidentally or inadvertently engaged.

Before engaging in any towed watersport activities with your Grady-White boat, make sure that you and all participants are knowledgeable of the proper and safe practice relating to such activities.

Watersport Safety

For additional information regarding watersport safety, please refer to the *Towed Watersports Safety Guidelines* brochure included in your Owner's Packet.

Suggested Boating Classes And Reading Material

Like a car, boats must be operated according to safety rules and traffic regulations. Although we include some basic boating tips in this manual, a thorough review of the safety rules and regulations for boating is beyond the scope of this text. A listing of boating safety courses approved by the National Association of State Boating Law Administrators (NASBLA) can be found at www.nasbla.org.

State law may require the certification or licensure of boat operators. To determine your state's boating license requirements, check with the responsible agency for the states *in which you operate*.

We support the work of the United States Coast Guard Auxiliary and the United States Power Squadrons. We urge you to attend any instructional classes sponsored by these organizations. Reference page 10 of *Sportfish, Cruisers, Yachts Owner's Manual* for training options, and page 28 for information on charts and maps. For further knowledge on boating, we advise that you review the following publications:

- **Piloting, Seamanship And Small Boat Handling**
  (Chapman)*
- **Boatman's Handbook**
  Tom Bottomly
- **Sorensen's Guide To Powerboats**
  Eric Sorensen

For more information on boating safety courses in your area call:

- Boating Education Hotline 1-800-336-BOAT (2628)
- US Coast Guard Boating Hotline 1-800-368-5647
- Contact Your Local Coast Guard

CHAPTER 3: GENERAL INFORMATION

Fueling

⚠ WARNING
Safety during fueling requires CAUTION and COMMON SENSE.

Please study the following precautions carefully. Consult your dealer if you have any questions. Prior to your initial fill-up, check your engine manual to confirm the type of fuel and octane rating specified by the manufacturer. Tanks should be filled when the boat is not in use to reduce the accumulation of moisture and condensation. Add stabilizer to fuel that won't be used in 60-90 days.

Fuel containing up to a 10% ethanol blend (E10) is acceptable for use in your boat. Do not use alcohol blended fuel that has greater than 10% ethanol such as E15 or E85. These concentrations may be harmful to fuel system components and outboard engines. Other considerations related to Ethanol fuel blends:

- Avoid mixing E10 with fuels that contain MTBE, an additive to gasoline in some fuel blends that oxygenates the fuel to reduce emissions.
- Use a 10 micron fuel filter to capture particulate contaminants that may be loosened from the fuel system due to the solvent nature of alcohol blended fuels.
- Carry spare fuel filters with a 10 micron rating on your boat for emergency replacement if required.

Before Fueling:

- Shut down all engines.
- Turn battery select switch(es) to "off" to insure that all fans, lights, etc. are off.
- Close all ports, hatches, windows and engine compartments to prevent fumes from accumulating in closed areas.
- Extinguish cigarettes and all other lighted materials.
- Have a fire extinguisher near.

During Fueling:

- Observe all safety regulations for the safe handling of fuel.
- Keep the fuel supply nozzle in contact with the fuel fill opening to prevent any static sparks.

After Fueling:

- Tighten the fuel cap until the audible clicking indicates it is secure. Check fuel hoses, connections, and tanks for leaks or deterioration. Wash and clean up any spilled fuel. Dispose of clean up rags or sponges on shore. Do not store these items in the boat.

- After fueling, ventilate all ports, windows, hatches and other closed areas. Conduct a "sniff test" to make certain all fumes are vacant before using the battery select switch(es).

See warnings and check list in Section 6, page 46 of the *Sportfish, Cruisers, Yachts Owner's Manual*. Reference *"Fuel Tank Compartment" on page 6-8* for more information on cleaning the fuel tank compartment.

Environmental Protection Agency

All Grady-White Boats meet the U.S. Environmental Agency standards in effect at the time of manufacture. All boats have an EPA label incorporated within their NMMA certification label. For international boats without an NMMA label, a separate label has been included to show compliance with EPA standards.

Pollution Regulations

The U.S. Coast Guard defines restrictions on the discharge of oil or hazardous substances and plastics or garbage in the "Federal Requirements for Boating and Boating Safety". You should have received this pamphlet when you registered your boat. Detailed below is a summary of those regulations. You should read the pamphlet and become familiar with any local restrictions where you operate your vessel. Passengers or crew members aboard your boat should also be notified of these regulations.

Discharge of Oil or Hazardous Substances

The Federal Water Pollution Control Act prohibits the discharge of oil or hazardous substances, which may be harmful, into or upon U.S. navigable waters.

Disposal of Plastics or Garbage

The MARPOL ANNEX V is the Act to prevent pollution from ships and other vessels. Federal regulations prohibit the discharge of plastic garbage anywhere in the marine environment. Plastic includes, but is not limited to: synthetic fishing nets, ropes, lines, straws, six pack holders, styrofoam cups and lids, bottles, buckets and plastic bags. These regulations also restrict the disposal of other types of garbage within specified boundaries from shore.

Trailering

The adjustment and balance of your boat on the trailer determines how easily your boat may be transported. The tongue weight on the hitch ball should be 5-10% of the total weight of your boat, motor and trailer. Tail-heavy loads cause swaying while trailering. The rollers and/or bunkers of your trailer should be adjusted so that the weight is distributed evenly across the stern and forward throughout the keel sections. Your dealer can help adjust your trailer properly.

Practice maneuvering the trailer; the trailer always backs in the opposite direction of the vehicle. To maneuver the trailer, turn the steering wheel in the direction you want the trailer to go. Familiarize yourself with this manual and all aspects of your boat prior to initial launch. At the launch site, go through a pre-launch checklist. The list should be suited to your specific needs.

Trailering and relative information can be found on page 105 in *Sportfish, Cruisers, Yachts Owner's Manual*.

Predeparture

See the checklist on page 44 in *Sportfish, Cruisers, Yachts Owner's Manual* before starting out.

Casting Off and Approaching The Dock

Unlike an automobile, the stern of your boat reacts first when turning. A turn to the right will swing the stern to the left and vice-versa. Remember that turning your boat away from an object, such as a dock, will tend to swing the stern toward that object. Reference procedures for casting off and approaching the dock starting on page 51 of *Sportfish, Cruisers, Yachts Owner's Manual*.

Reboarding Ladder

Your Grady-White boat is equipped with a reboarding ladder. In addition to allowing entry and exit of the boat for swimming or other activities in the water, it also provides a means of unassisted reboarding in the event of someone falling overboard. This ladder is located on the platform at the stern of the boat and is accessible by a person in the water. To deploy, lift the hinged section and swing it away from the boat so that the rungs are in the water. The ladder is telescopic and can be extended by manually pushing or pulling on the last rung. When the ladder is not in use it should be retracted and kept in the stowed position on the platform. Some boat models are equipped with an additional ladder in the bow, or a removable ladder for use with a cockpit side door. These ladders are not intended to be used for unassisted reboarding.

⚠ DANGER

To avoid risk of injury or death from contact with propellers, engines should not be running when near swimmers or when using reboarding ladder.

Anchoring

Some factors that determine the size and type of anchor most suitable for your boat include the size of your boat and the type of lake, sea or river bottom in your boating area. *Sportfish, Cruisers, Yachts Owner's Manual* has a list of tips concerning anchoring starting on page 56.

NOTICE

It is illegal to tie your boat to navigational aids such as buoys and markers.

WARNING

Never anchor off the stern of the boat especially in strong winds or currents. The weight of the stern and flat surface to the seas can easily cause water to enter over the transom and swamp the boat.

Towing

In the event of a mishap or power loss you may need to tow a boat or be towed. You should not tow a boat larger than your own. Always use safety and good judgment when towing. Never tow a boat if you are not equipped with the proper lines. Passengers should never grasp a towline. It should be secured to the boat. See page 39 in *Sportfish, Cruisers, Yachts Owner's Manual*.

Before towing a boat, make a bridle and tie it securely to the pad eyes on the transom with enough slack to clear the engines. Pad the line wherever it comes into contact with the boat to prevent chafing. Attach a tow line to the bridle so that it can slide from side to side to prevent too much pressure on a single pad eye. The tow line should then be attached to the bow eye or to a bridle on the towed boat. The tow line should be a minimum of twice the length of the towing boat, the longer the better. Do not try to run in too close when passing the towline to the other boat. Send either a light line or attach the towline to a life preserver to be pulled in. Be aware of the other boat's propeller.

The towed boat should always have someone at the wheel since the boat may swing off course. Start the tow off slowly; a steady pull at a moderate speed should be used. It is important to keep the slack out of the propeller area. Watch the action of the towing boat. If excessive slack develops in the towline and contact is obvious, turn in either direction to avoid hitting the stern.

WARNING

As a precaution, passengers on both boats should stay clear of the towline; lines under stress could snap and fly in either direction causing injury.

Shallow Water

Most boats that become grounded can be floated off with engine(s) tilted to reduce the draft at the transom. With motors tilted, try rocking the boat from side to side to break the suction of mud from the keel. Move passengers or heavy objects from the point where the boat is grounded. Do not lower or start the engine(s) until the boat is clear of the ground. Refer to page 63 in *Sportfish, Cruisers, and Yachts Owner's Manual*.

⚠ CAUTION

Do not lower or start engines if the propeller is in mud or sand. Wait until the boat is refloated to avoid damage to the cooling system of your engine.

Be mindful of water level fluctuations when boating in water with tidal changes. If you are grounded on an incoming tide, you can wait until the tide is high enough to refloat your boat. However, on an outgoing tide, quick action should be taken to refloat your boat. If this is not possible, set an anchor to keep the boat from becoming driven further aground. Set the anchor to counter the action of the wind or current. The anchor, in some cases, can also be used to pull the boat free.

Many inland areas have rocks and stumps which could crack or puncture a fiberglass hull. Be familiar with the boating area, and use caution in shallow water.

General Information On Boat Handling

The best method of learning how to handle and obtain the best performance from your boat is to practice and experiment. After several hours of operation, you should experiment with the throttle settings to discover the setting that will be the most comfortable and economical range for your particular load conditions.

We suggest that you make a speed and RPM chart to obtain the most economical operation. Operate the boat at various speeds and check the fuel consumption. Compute the amount of operating time remaining when the fuel gauge has only one bar remaining on the display. Make a log of this type of information and have it available when using your boat. Other statistics you may want to determine could include the following:

- Minimum speed for effective steering.
- Turning radius at different speeds.
- Response to steering at low speeds.
- Accelerating and deceleration rates.
- Time and distance to bring the boat to a stop at different speeds.
- Control of the boat in close quarters.
- Time required to bring the boat on plane.

Also read the section in *Sportfish, Cruisers, Yachts Owner's Manual* beginning on page 59 for information on safe operating speed.

Twin and Triple Engine Boats

Twin and triple engine boats are easier to maneuver than single engine crafts. However, they still require practice to ensure comfortable operation. The boat will run ahead or backward in a straight line when multiple engines are working together at the same speed. The engines also can be used to steer to port as well as starboard. Moving ahead on one engine will cause the bow to swing away from the running engine side and to move forward at the same time. Backing up with one engine will cause the bow to swing toward the running engine side and the boat to move backward. With twin engines, running one engine ahead and one engine astern will cause the boat to turn end-for-end in little more than its own length and running multiple engines in the same direction at different speeds will cause the boat to move in the direction dictated by the faster engine but its influence will be modified by the slower engine.

Commonly Used Nautical Terms

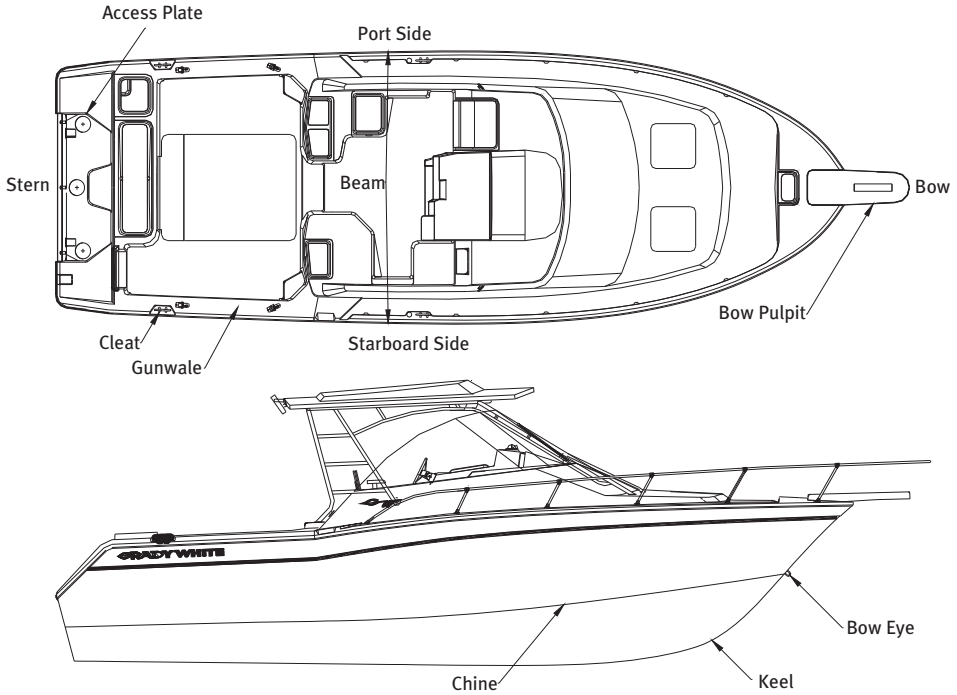

Abeam: a line perpendicular to a boat's keel

Access Plate: a removable, watertight cover that provides quick entry to enclosed areas for maintenance or visual inspection

Aft: toward the rear or stern of the boat

Beam: the greatest width of the boat

Bilge: the lower interior area of the hull

Bow: the forward section of the boat

Bow Eye: a U-shaped hull fitting used to attach the trailer winch to the boat

Bulkhead: vertical partition in the boat

Chine: point where the topside and bottom of the boat join

Cleat: deck fitting with arms or horns on which lines are fastened

Deck: upper structure which covers the hull

Draft: depth of water required to float a boat

Fathom: a depth measurement equal to six feet

Freeboard: distance measure between waterline and deck

Gunwale (Gunnel): point where the deck and hull join

Hatch: an opening in the deck to provide access below

Headroom: vertical distance between the floor and over head structure or canopy ceiling

Hull: major component that provides a watertight platform buoyant enough to float a craft and its load

Keel: the major longitudinal member of a hull—the lowest external portion of the boat

Knot: a measurement of speed equal to nautical miles per hour

Lee: the side that is sheltered from the wind

List: a tilt or lean to one side

Port: a term designating the left side of the boat when facing forward

Scupper: holes permitting water to drain overboard from deck and cockpit

Sheer: curve or sweep of the deck as viewed from the side

Starboard: a term designating the right side of the boat when facing forward

Stern: rear of the boat

Stringer: longitudinal members fastened inside the hull to add rigidity and strength

Wake: the movement of water created by a moving boat

Windward: side facing the direction of the wind(against the wind)

CHAPTER 4: PERFORMANCE

Performance Factors

Maximum performance is dependent on many factors and cannot be guaranteed. These factors will vary with changing conditions. Some of these factors are listed below. Reference the trouble-shooting guide on page 75 in *Sportfish, Cruisers, Yachts Owner's Manual* for additional suggestions on adjusting performance.

Engine Efficiency

Engines operate most efficiently when they are properly tuned, and the props are in good condition. Efficiency will decrease if normal care and maintenance are not performed. Neglecting the engines will cause power to drop and speed to decrease. In addition, expensive repairs may become necessary. Be sure to follow all instructions in the engine operation manual(s).

Weather Conditions

Weather conditions sway engine performance. Barometric pressure and humidity affect horsepower. A change of weather could amount to a 10% loss in horsepower on some hot days.

Load Distribution

A decrease in performance will be noted when gear, equipment, passengers, and fuel are added. This extra load will affect the performance of your boat according to the distribution of the weight. Another type of extra load that could affect performance is the accumulation of water in the bilge. Keep the bilge dry to eliminate this type of problem.

Marine Growth

Maximum performance is obtained only when your hull bottom is clean. Marine growth on the bottom of the boat will increase resistance and decrease speed. These conditions will also increase fuel consumption. Reference *"Cleaning" on page 6-1* for more information on cleaning your hull bottom.

Trim

Trimming refers to the use of the power trim or trim tabs in order to change the running or static attitude of the boat. The engine(s) on this boat is equipped with power trim. Power trim is designed to enable you to change the angle of your engine(s) relative to the boat. Power trim allows the boat to get on plane by lowering the bow. When on plane you can adjust the trim of your engine(s) in order to avoid "plowing" or "porpoising". See pages 63 and 83 in *Sportfish, Cruisers, Yachts Owner's Manual* for more information. The trim tabs on your boat also control the trim of the boat, similar to the power trim. Refer to the Trim Tabs section in Chapter 8 for additional information.

Propeller

The condition of your prop has a major influence on the performance of your boat. Your engine(s) should be equipped with the best size prop for normal conditions. Unusual uses or weight conditions may require special props. A damaged prop can affect your boat's top speed, cause vibrations, create a sudden drop in RPMs or even increase fuel consumption.

⚠ CAUTION

Stay within the engine manufacturer's maximum and minimum RPM ranges when replacing props. This information is located in your engine manual.

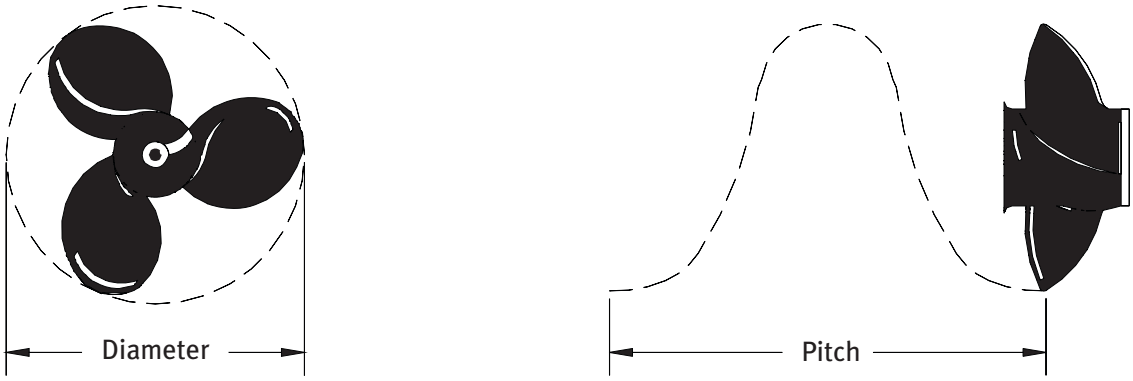

Diameter and pitch are the two basic dimensions of a propeller. Diameter is the distance across the circle made by the blade tips as the propeller rotates. Pitch is the theoretical (not accounting for slippage) forward distance the propeller would move in one revolution. An example of a propeller dimension would be 14 X 17 for a propeller having a diameter of 14" (35.6 cm) and a pitch of 17" (43.8 cm).

Propulsion System – Outboard

The engine manufacturer supplies all vital information concerning your engine(s) in the Operation and Maintenance Manual(s). Details of important engine functions such as the lubrication system, cooling system, and alarm/monitoring system are outlined in these manuals. Your familiarization with this engine reference material will result in the proper usage and service essential for safe and enduring engine performance. These manuals are included with the Owner's Packet.

⚠ DANGER

Do not inhale exhaust fumes! Exhaust contains carbon monoxide — a dangerous gas which is potentially lethal.

⚠ WARNING

Do not attempt to service any engine or drive component without being totally familiar with the safe and proper service procedures. Certain moving parts are exposed and can be dangerous.

⚠ CAUTION

Do not paint the outboard motors with anti-fouling paints designed for boat hulls. Many of these paints can cause severe damage to the engines.

Steering

Most outboard engines are equipped with an adjustable rudder trim tab. This trim tab should be adjusted to balance the steering at the speed which you travel most frequently. Variations in speed, boat load or engine trim will cause the steering to pull in one direction. If the boat pulls to the left, adjust the trim tab to the left and vice-versa.

- **Hydraulic Steering**
  Hydraulic steering systems require regular preventative maintenance for continued safe and reliable operation. The oil level in the helm pump must be maintained within acceptable operating levels. A low oil level will allow air to get into the steering system and result in unresponsive steering. The oil level should always be at the base of the threads in the filler hole, located on the front top portion of the helm pump. Check the entire steering system regularly for oil leaks. Unobserved leaks over a period of time will result in unresponsive steering and possibly loss of steering. Refer to the steering manual for specific recommendations and additional maintenance requirements. Any slow or sudden change in the “feel” of your steering system indicates an immediate need for a thorough inspection. All repairs and replacements to steering systems should be made only by a qualified marine technician.
- **Tilt Steering**
  If tilt steering is available on your model, this accessory will be in conjunction with either mechanical steering or hydraulic steering depending on the model. This feature enables the operator to tilt the wheel up or down. Refer to the steering system’s manual for information on oil levels with hydraulic tilt steering.

Throttle/Shift Controls

The throttle/shift controls located at the helm station control the flow of fuel to the engine. They also act as gear shift levers to control the forward and reverse thrust of the propellers.

The middle position of the throttle control is the neutral position. Move the control forward to engage the shifting mechanism which creates a forward thrust of the propeller. Advance the forward movement to increase the fuel flow to the engine and boost the forward lunge.

Move the control lever aft of the neutral position to reverse the shift mechanism and create a reverse thrust of the propeller. Increase the aft movement to increase the reverse thrust. Remember that propellers are designed for maximum forward thrust; so, reverse thrust will not be as efficient.

All controls have a neutral safety mechanism. This mechanism will not allow the engine to start when the control is in gear. You may use the neutral lock out feature on the control handle to increase the flow of fuel to the engine while remaining in the neutral position.

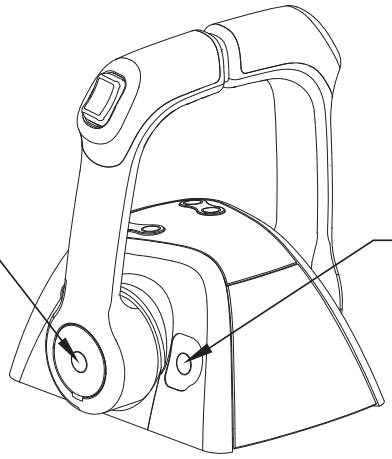

If your boat is equipped with Helm Master™ there is a feature that is similar to a neutral lock-out on other boats. When activated, the free throttle button allows opening the throttles on all engines without engaging the forward or reverse gear. The active indicator will be illuminated during operation.

See Yamaha Helm Master™ Operation Manual for detailed instructions.

Reverse the shift mechanism to stop a boat that is moving forward. This change in direction will provide a “braking action” and slow the boat.

⚠ CAUTION

The braking action causes a wake which may wash over the transom and flood the boat if the vessel is moving too fast. Allow engine RPMs to decrease before shifting into reverse. Also, under certain conditions, not allowing the RPMs to reduce before shifting to reverse may cause the engine(s) to shut down.

The throttle/shift control system requires regular preventative maintenance for continued safe and reliable operation. Refer to the engine manual for specific recommendation and maintenance requirements. All inspections, repairs, and replacements to the throttle/shift controls should be performed only by a qualified marine technician.

Consult your engine manual for more information regarding the Yamaha electronic system.

CHAPTER 5: INSTRUMENTATION AND SWITCHES

Yamaha Instrumentation Panel

Grady-White installs full Yamaha Command Link or Command Link Plus instrumentation on all boats. The instruments are powered by the ignition key(s) and will operate when the ignition switch(es) is in the “on” position.

Yamaha Command Link Display (Mechanical Engines)

Yamaha Command Link CL7 Display (Digital Engines & Helm Master™)

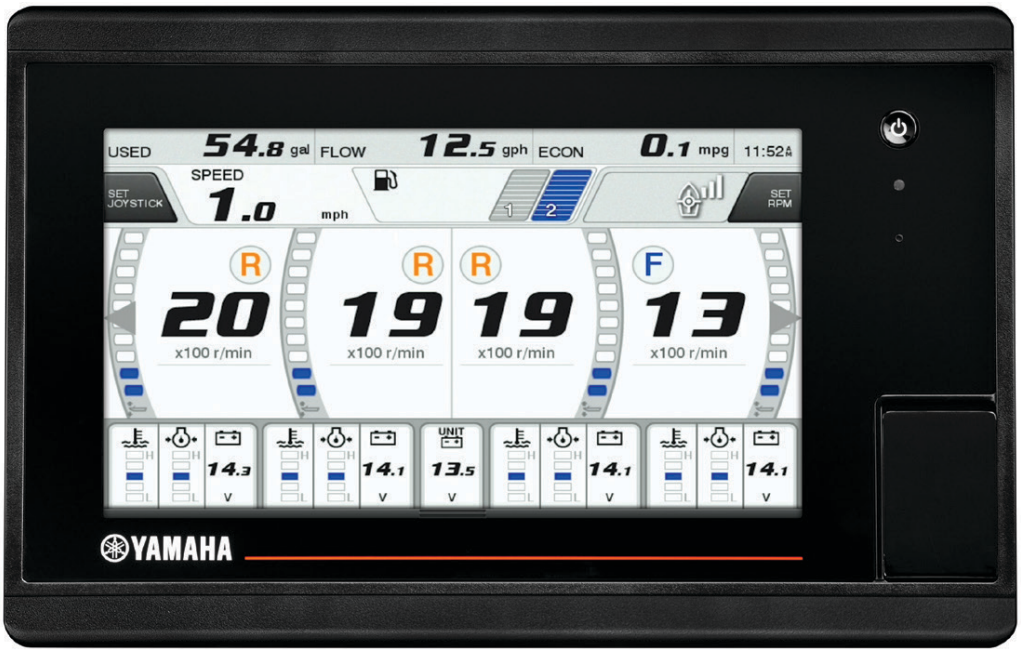

The Yamaha display provides engine and boat information listed below. The display of these functions and other graphics may be customized. Please see the Yamaha owner's manual for detailed instructions on customizing.

- **Fuel Level**

  This feature indicates the gas tank(s)' fuel level. Remember two things when reading this gauge:

  - The accuracy of your gauge varies with the attitude of your boat in the water (trim or list).
  - The fuel pickup tube inside the gas tank is not capable of withdrawing all of the fuel from the tank.

  For these reasons, never operate your boat at extremely low fuel levels.

- **Fuel Economy**

  This feature indicates the engine's fuel economy in miles per gallon.

- **Fuel Consumption**

  This feature indicates the fuel consumption in gallons since the feature was last reset.

- **Fuel Flow**

  This feature indicates the fuel flow through the engine(s) in gallons per hour.

- **Low Fuel Warning Indicator**

  This feature indicates when the fuel level in the fuel tank(s) is becoming low by flashing the lowest bar.

- **Speedometer**

  This feature indicates boat speed in miles per hour or knots. On boats with V8 engines, this gauge must be interfaced with a GPS.

- **Trip Distance Meter**

  This feature indicates the distance traveled in miles or nautical miles since the meter was last set.

- **Revolutions Per Minute (RPM)**

  This feature indicates the RPM using 100 RPM intervals. Consult your engine owner's manual for the recommended operating RPM range.

- **Trim Position**

  This feature indicates the angle of thrust of the engine. See *"Trim" on page 4-1* for adjustment recommendations.

- **Battery Voltage Indicator**

  This feature indicates the battery charge when the engine is off and indicates the alternator output when the engine is running. A reading of 12 or 13 volts is normal indicating a fully-charged battery. Readings of 11 or below indicate a weak battery which may not start the engine. A reading of 13 to 15 volts when the engine is running is normal. Readings over 15 volts may indicate regulator problems. Low or fluctuating readings may indicate loose connections or trouble in the regulator and alternator circuit.

- **Cooling Water Temperature with Warning**

  This feature indicates the temperature of the cooling water circulating through the engine and warns you when the temperature exceeds the recommended operating range indicated by your engine owner's manual. Should you receive this warning, immediately shut off your engine to prevent damage. Overheating is often caused by obstruction of your engine's intake on the lower unit. Check this water intake first if you experience trouble.

- **Hour Meter**

  This feature records the cumulative number of hours the engine has been in use.

- **Trip Hour Meter**

  This feature indicates the number of hours the engine has been in use since it was last set.

- **Oil Pressure with Warning**

  This feature indicates the engine oil pressure with a warning for low oil pressure. Refer to your engine owner's manual for information regarding engine oil and oil pressure.

Yamaha Helm Master™

Helm Master™ is an fully integrated boat control system for Yamaha outboard-powered boats, in twin, triple, or quad engine configurations, which includes digital electronic steering, digital electronic throttle and shift, and a joystick control to facilitate docking. It also includes a virtual anchoring system, called "Set Point."

The Helm Master™ Set Point has three primary modes: Stay Point™, Fish Point™, and Drift Point™. Each Set Point mode provides a solution to the sometimes tricky maneuvering challenges boaters encounter every day. Here is how it works:

- **Stay Point:**
  Stay Point keeps the boat positioned near a particular spot; it maintains a selected position and heading.
- **Fish Point:**
  Fish Point enhances fishing options; it maintains a selected position, but not a heading, and primarily uses only idle RPM to do so.
- **Drift Point**
  Drift Point allows the boater to drift the boat with the wind or the current; it maintains a selected heading, but not a position.

On the joystick are two control selector buttons. The Joystick selector activates the joystick. The remote control must be in the neutral (center) position for this selector to be activated. The High Mode selector allows for increased engine RPM. The joystick controls the side to side and rotational movement of the vessel. The operator is the central pivot point around which the boat moves and the further one moves the joystick, the greater the thrust and speed in that direction. Return the joystick to the neutral position when finished maneuvering. Operating the throttle disengages the joystick and returns operation to the remote control box and steering wheel.

The Digital Steering Helm sends signals to the Powertrain Control Units (PCU), which control the operation of the electric pumps that pump hydraulic fluid to the steering cylinders on the engines. The Steering Control Unit (SCU) receives signals from the steering cylinder position sensors and the PCUs to carry out joystick and steering operation. One by-pass valve assembly per engine is required, and allows the hydraulic pump system to be by-passed in an emergency or for maintenance.

The Digital Remote Control has 6 control selector buttons whose activation is indicated by a green LED. The Speed Control selector is used to set the RPMs throughout the range of the engine. The Single Lever selector allows the port lever to control the shifting and speed of all engines. The Station Selector is used to select the active station on boats with two stations. The Center Engine selector allows the port lever to control the center engine only in triple engine applications. The Trim Assist selector allows the operator to synchronize the trim angle to a given RPM so that the engine will trim to the desired angle. The Free Throttle selector allows the selected engine to be throttled up with the shift function disengaged.

The Electronic Key Switch uses a radio frequency key to power the main ignition panel. Touch the key to the panel and two audible beeps indicate the system is unlocked. Press the Ignition button, then the Start/Stop button to start the engines. To engage the Y-COP security system touch the key to the panel after the engines are turned off. A single audible beep indicates the system is immobilized.

The Command Link Plus® display allows the operator to adjust and customize settings, though some settings must be adjusted by an authorized technician. The information provided here is only intended to be an overview of the system. For complete details on the operation and set-up of the Helm Master system please refer to the Yamaha owner's manual or consult your dealer.

Switch Panel

At the helm station you will find an accessory switch panel. Not all boats are equipped with the same accessories. Consult your dealer for specific information or questions on the accessories included on your boat. More detailed descriptions of switch functions are located in Chapter 8 of this manual.

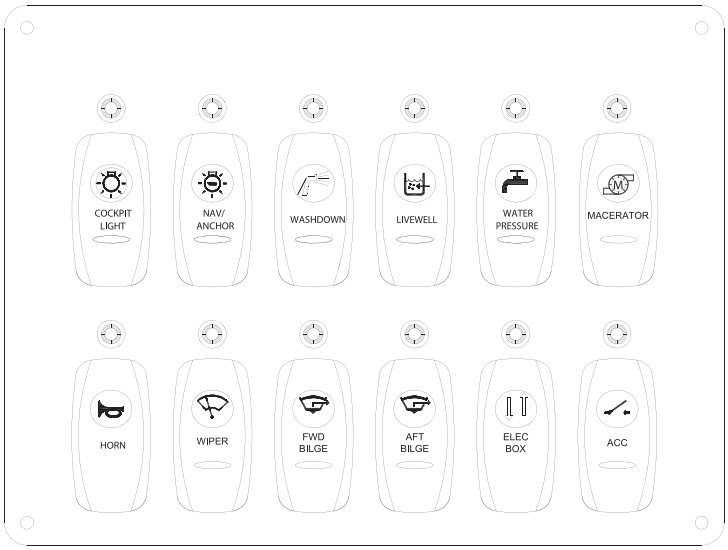

This drawing represents a generic switch panel layout. Actual panels will differ depending on the boat model and optional accessories installed during manufacturing.

CHAPTER 6: MAINTENANCE AND SERVICE

General

The amount of maintenance required to keep your boat operating properly and to maintain the appearance is dependent on how the boat is used, amount of usage, salt or fresh water, geographic location, etc. While proper maintenance of your boat is a source of pride, it is also key to maintaining your boat's value.

Some basic maintenance items are covered in this chapter. Other manuals in your Owner's Packet contain important additional information regarding the use and maintenance of your boats other systems.

Keep the bilge area clean and dry. Leaks found early and corrected will less likely cause damage. Do not allow grease, grime, and dirt to build up.

Exterior Fiberglass Finish

The exterior finish of your Grady-White is a thin layer of resin with a finished color pigment called gel-coat. It is used for cosmetic purposes and makes routine maintenance relatively simple. Although gel-coat has a hard smooth surface, it does contain microscopic pores that will allow surface discoloration if not kept clean.

Maintenance

Normal exterior finish maintenance of your Grady-White is similar to the care you would give your automobile. Do not use caustic, highly alkaline cleaners or those containing ammonia. These cleaning agents may darken gel-coat. The resulting stain is a chemical reaction and can be removed with a rubbing compound or by light sanding with 400 grit followed by waxing. Also, using common household bleach (chlorine) may damage the gel-coat finish just like bleach can damage clothing with colors. Bleach impacts solid colors by causing blushing or fading and for this reason should not be used on gel-coat.

Cleaning

The best way to prevent discoloration and soil build-up is to hose the boat with fresh water after each outing or on a regular basis. This build-up is the result of use and environmental pollutants. Clean the boat regularly with a mild household detergent and plenty of fresh water. Avoid strong detergents, citrus based cleaners, or bleaches. These products are potentially harmful to the appearance and durability of your boat's gel-coat. Always read the label before using any cleaning product to make sure it says safe for use on fiberglass finishes. Use a sponge on smooth surfaces and the deck. A brush can be used on the nonskid areas. Use fresh water to rinse away all grime and residue.

Finish/Waxing

Gel-coat will age or dull naturally due to constant exposure to the natural environment and pollutants. Discolorations are shallow in depth. Factors that will affect the rate of discoloration are: the sun, pollution, old wax accumulation, and the salt content of water. Polishing compound (fine abrasive) or rubbing compound (coarse abrasive) is recommended for use on fiberglass finishes to remove scratches and stains or restore severely weathered surfaces. These products can be applied by hand or mechanical means. The process below will help restore fiberglass finishes:

- Clean the affected area with a good detergent and fresh water.
- Remove stubborn stains or discoloration by gently wet sanding the affected areas with 600 grit "wet or dry" sandpaper. **Always sand in one direction.** Use plenty of water and sand curves in the same direction. Dry the area to make sure all the discoloration has been removed. Repeat this process if necessary.
- Buff using a polishing compound suitable for fiberglass, an electrically or pneumatically operated buffer at low speed (1750-2250 RPM), and an 8-inch (20.3 cm) lamb's wool pad.

⚠ CAUTION

Keep buffer moving. Do not allow it to rest in one spot. Heat build up will quickly distort the surface.

⚠ CAUTION

Compounding too often or excessive compounding can wear away the gel-coat.

When buffing is complete, wash away compound with fresh water and dry the area.

- Once the area is clean it may be waxed. This will enhance the gloss while providing a seal to prevent staining or soil accumulation.
- See a local dealer for advice on wax for your boating region. The wax film will seal the pores as well as enhance the looks of your boat. **Do not wax surfaces that may be walked on; they will become slippery.** While waxing your boat, inspect the surface for any damage. Have the damage corrected as soon as possible.

Repairing

Though gel-coat is a very durable material, it is susceptible to scratches, blistering, and web-like cracking (crazing) over time. It is elastic enough to withstand strong blows while flexing with the hull's movement. Gel-coat problems are cosmetic and will not affect the structural integrity of your boat.

Some gel-coat damage and imperfections such as nicks and scratches can be repaired by obtaining a color match patch kit. This kit can be purchased through your Grady-White dealer. Instructions are included in the patch kit.

⚠ WARNING

M.E.K.P. (Methyl ethyl ketone peroxide), gel-coat and acetone are flammable and hazardous chemicals that must be handled properly. Follow instructions carefully. After the gel-coat is catalyzed, it will soon heat up and put off fumes. When finished with catalyzed chemicals, or if they start to build up heat, submerse completely in water until cool.

Bottom Paint

If your boat is left in the water for more than a few days at a time, the hull bottom below the waterline should be painted with anti-fouling paint to protect it from marine growth and barnacles that hinder performance. Since anti-fouling paint slowly dissolves, yearly inspection and cleaning of the hull bottom to prevent marine growth is advised. Repaint when necessary. To help prevent blistering, use an epoxy barrier coat to be applied in conjunction with the anti-fouling paint.

Grady Drives

The finish on your engine bracket and swim platform is designed to enhance your boat's appearance and help protect the bracket and platform from corrosion. If the finish should be accidentally scratched, repair it immediately. Damaged areas can be repaired with the "Touch-Up Kit" included with your product when it shipped from the factory. Please follow the instructions for using the "Touch-Up Kit".

Your bracket is made from marine grade aluminum. Should you desire to coat your bracket with anti-fouling or "bottom-paint", chose a paint that is intended for aluminum. Follow the paint manufacturer's instruction exactly.

Caution must be taken to separate bottom paints not intended for aluminum from your aluminum bracket (consult your paint dealer).

The bracket is equipped with a sacrificial anode. By corroding away, the anode sacrifices itself to help reduce galvanic corrosion to your bracket in salt or brackish water. They are easy to replace; inspect and replace them regularly. Do not paint the surface of the anode.

Brackets are designed to be water tight when properly installed. Inspect seal integrity and bolt tightness regularly. Loose bolts or insufficient seal around bolts and bracket to transom can lead to bracket corrosion or lack of hull seal. Bracket interior is easily accessed through the deck plate. **Finger tighten only** when replacing the deck plate after bracket interior inspection.

Brackets are equipped with a drain plug in the bottom of the bracket near the transom. This plug should only be used if water is found inside the bracket. When replacing drain plug, coat threads with a Teflon thread sealant and do not over tighten.

Canvas

Grady-White's canvas is made using the highest quality vinyl and latest sewing techniques. The canvas will not be completely leak proof. The seam holes in your canvas may stretch and tend to leak. However, you can correct this problem by applying Apseal® or Uniseal™ to the seams.

Please understand that Grady-White does not warrant the fit and design of the canvas to be entirely watertight.

Maintenance of Canvas

To maintain your boat's top and other canvas follow these guidelines:

- Clean the fabric regularly to prevent the buildup of soil and soil penetration of the fabric. Simply brush off any loose dirt, hose down canvas and clean with a mild solution and warm water.
- Do not use petroleum-based or ammonia cleaners on canvas or clear vinyl as they will yellow.
- For heavily soiled fabric, remove from the frame. Soak the fabric in a solution of ½ cup (.12 L) of Clorox® and ¼ cup (.06 L)of Ivory® or Lux® soap per 1 gallon (3.8 L) of warm water.
- Let soak until mildew and stains can be brushed out with a common kitchen brush.
- Rinse thoroughly with cold water until all soap is removed.
- Allow fabric to air dry completely.

NOTE: Do not steam press or dry in an electric or gas dryer. This will damage the canvas fabric. Water repellent was applied to your canvas during manufacturing. The repellent may have diminished after extended cleaning. Re-treatment of the fabric is recommended after extended cleaning. Do not use wax-based treatment products. Use a water based repellent like Apseal® or Uniseal®. Scotchguard® is effective for short-term use only.

Snaps and Zippers

To protect the snaps and zippers on your boat's canvas and cushions from corrosion and binding, Grady-White includes a tube of lubricant (E-Z Snap®) in your Owner's Packet. The lubricant, manufactured by IOSSO (part number 10909), should be applied per the manufacturer's directions during the initial use of your canvas and cushions. The lubricant should be reapplied every 3 months or sooner depending on your boating environment and usage. Contact your dealer if you need to reorder lubricant. A snap assist tool should be used whenever you remove the canvas or cushions to prevent damaging or tearing the material.

Vinyl

- Clean clear vinyl thoroughly with denatured alcohol and apply a protective layer of clear wax. **Do not** use paste wax, as it will turn the vinyl yellow. This process should be repeated as necessary to maintain the protective wax coating.
- Store and secure canvas before trailering.
- Dry all canvas before storing to prevent mildew.

- **Roll** vinyl panels to prevent them from cracking. This is necessary to prevent them from cracking. **Never fold these pieces!**

Upholstery

Your exterior vinyl upholstery may be cleaned with a mild solution of household detergent and fresh water. Commercial cleaners for vinyl also work well. Since the seams of your exterior upholstery are not waterproof, your upholstery should be stored in the cabin or covered when not in use. Exterior cushions will trap moisture between themselves and the gel coat. If a cushion is not removed to allow the moisture to dry, blistering of the gel coat may occur. Cockpit bolsters may be removed if you desire. These bolsters clip onto brackets mounted to the deck structure. Screws are then installed through the underside of the bolster to hold them in place.

Polyethylene/Acrylic/Vinyl

In the cockpit area of your boat, acrylic and vinyl are used for trim and polyethylene is used for the toe rails and rod racks. Routine maintenance for vinyl should include regular cleaning with soapy water and the application of a surface protector at least twice per year. Polyethylene can be cleaned with products such as 409® or any spray and wipe cleaner. Acrylic can be maintained with mild soap and water and a soft cloth.

Scuppers

Grady-White boats have self-bailing cockpits meaning water on the cockpit floor drains by gravity through large aft scuppers and **not** into the bilge. The aft drains (scuppers) have an external scupper flap assembly that restricts the flow of water back into the boat. Inspect the flaps periodically to make sure they are free of debris. The scupper flaps may need periodic replacement if the rubber becomes damaged or no longer seals properly in the thru-hull.

In addition to inspecting the scuppers, annually inspect the hoses and replace if necessary. To inspect hose, observe water flow between the cockpit and the thru-hull. If water flow seems restricted, a high pressure water hose can be used to flush debris from the scupper hose. If water leaks into the hull interior from the hose or fittings, replace these components immediately before using the boat.on a regular basis first make sure the seacock is closed, then

Caulking/Gasket

Deck fittings, bow rails, windows, hatches, etc. have been caulked or gasketed with the highest quality material to ensure a waterproof joint with the boat. However, the working action of normal use will tend to flex the joint and eventually break down the seal between them. Periodically inspect the caulking or gaskets for leaks. Recaulk or replace the gaskets as necessary, or have your dealer do the repair.

Hardware/Stainless Steel Rails

The hardware on your Grady-White is made of laboratory grade 316 stainless steel and needs regular cleaning to maintain its "less staining" properties. The key to maintaining your stainless steel is to keep it clean with a mild solution of soap and **fresh** water. Remove salt or dirt from your stainless steel on a regular basis.

Hardware Mounting

When fastening new hardware to the boat, be sure to seal the opening properly with silicone or 5200 to prevent leakage into the laminate or into the boat.

Aluminum Components

Hardtop Frames and Rod Holders

Due to the nature of aluminum and the harsh exposure conditions of the marine environment, it is important to follow a **required maintenance procedure**. Failure to follow a preventative maintenance procedure will most likely result in aluminum pitting.

Both painted and anodized aluminum parts must be washed periodically with a very mild soap and water solution. Grady-White recommends washing with a mild soap (such as Ivory® Liquid) after each use and every two to three weeks if stored in an outside marine environment. Strong cleaners and soaps must not be used. Never use abrasive cleaners or products that contain chlorine bleach. These products can remove paint and anodized coating.

Give special attention to the upper tubes of a hardtop or T-top frame. The area just below the top is shielded by the canvas or fiberglass top and does not receive the natural rinse that rainwater provides. Failure to thoroughly clean and maintain this area will allow contaminates that attack the aluminum to remain on the frame.

For maximum protection on anodized aluminum, coat parts with a non-abrasive metal protector. The best protectors will displace moisture, remove contaminates, and leave a wax film protecting the anodized aluminum. Follow the application guidelines for the product you choose.

Metal Protectors:

Boeshield T-9	**Aluma Guard**	**Premier Polish**
PMS Products Inc.	Rupp Marine, Inc.	Aquatech by Nautical Choice
76 Veterans Dr.	4761 Anchor Ave.	6726 Netherlands Drive, Suite 200
Holland, MI 49423	Port Salerno, FL 34992	Wilmington, NC 28405
800-962-1732	866-477-2678	800-853-7760
www.boeshield.com	www.ruppmarine.com	www.aquatech-marine.com

CAUTION

Do not use abrasive cleaning products, pads, steel wool or steel brushes. These products will damage the finish.

Fuel System

To determine whether a fuel flow problem is in your fuel system or your engine, follow this simple method. Connect a portable tank to the engine and operate the engine. If the problem persists, the likely cause is with the engine itself. If the problem goes away, the source must be in the boats' fuel system. One component that should be inspected if a restriction occurs is the anti-siphon valve. If fuel does not flow properly through this part, it must be cleaned and/or replaced.

⚠ WARNING

Do not remove the anti-siphon valve and replace with a regular barb. Modification or removal of the anti-siphon valve could allow a dangerous accumulation of fuel and vapors in the hull in the event of a fuel system leak.

Annually conduct a detailed inspection of fuel system components, especially those hidden from routine inspection. Replace any fittings, deteriorated hoses, clamps or connections immediately. Fuel filter/water separators should be replaced at least annually.

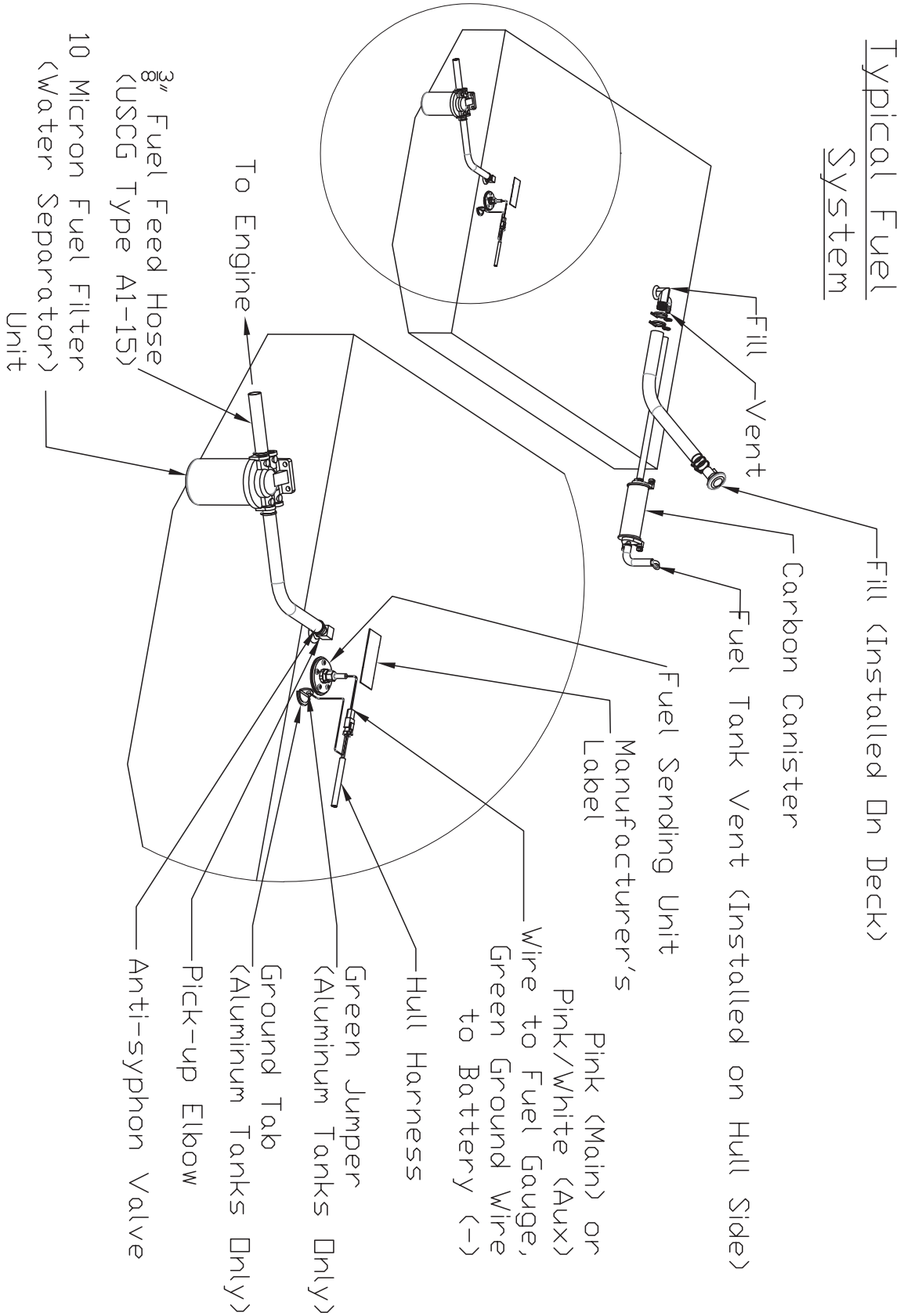
Typical Fuel System
Fill
Vent
Fill (Installed On Deck)
Carbon Canister
Fuel Tank Vent (Installed on Hull Side)
Fuel Sending Unit
Manufacturer's Label
Pink (Main) or Pink/White (Aux) Wire to Fuel Gauge, Green Ground Wire to Battery (-)
Hull Harness
Green Jumper (Aluminum Tanks Only)
Ground Tab (Aluminum Tanks Only)
Pick-up Elbow
Anti-syphon Valve
To Engine
3/8" Fuel Feed Hose (USCG Type A1-15)
10 Micron Fuel Filter (Water Separator) Unit

The fuel tank compartments need to be rinsed periodically especially when used in a salt-water environment. Dirt accumulation attracts salt, creating salt crystals. Salt crystals can corrode most metal surfaces if left untreated over a period of time. To help protect your fuel tank from corrosion, rinse the compartment with **fresh** water. After rinsing, make sure all water is drained from the compartment. Remove the access plates from the fuel tank lids and inspect this area for leaks or unsecured lines. The access plates on your fuel tank lids keep the fuel compartments sealed.

Batteries

Proper battery power is essential to the operation of your vessel. For this reason, Grady-White has carefully chosen batteries with cranking ability and reserve capacity sufficient to meet your needs. Grady-White uses Deka Intimidator 8A27M brand marine batteries. If your boat is equipped with batteries not installed at the factory, consult with the battery manufacturer for proper care and maintenance instructions and the engine manufacturer for appropriate battery specifications. Replacements batteries should always be of the same brand, model, age and size. Never mix different types of batteries.

The Intimidator 8A27M is an absorbed glass mat (AGM) battery that is completely spill proof and maintenance free. AGM batteries recharge faster than conventional batteries and have a higher tolerance to deep discharge for more severe applications. AGM batteries are subject to permanent damage if used with a charging system not compatible with this technology, which should be considered if using a charging system other than those installed on your boat.

Batteries contain electrolytes and acids that can be harmful and volatile. They can also present an electrical hazard. When handling or servicing batteries, exercise caution and follow these guidelines.

- Avoid contact with skin, eyes, and clothing. Protective gloves and eye wear should be worn when servicing to minimize risk.
- Batteries can produce explosive gases. Ventilate when charging. Keep sparks, flames and cigarettes away at all times.
- An insulated boot should cover battery terminals in normal use. Never allow anything metal to bridge between the positive and negative terminals which could arc or create a burn hazard.
- Keep battery terminals clean by scrubbing them with a stiff brush and a mixture of baking soda and water. Afterwards, apply a light coat of grease or corrosion preventative.
- Batteries should be secured to minimize movement when the boat is in use.

This is not a complete set of guidelines. It is your responsibility to safely maintain your batteries and avoid injury. Use good judgment and remain alert when working with batteries. In the event of an accident, immediately seek medical attention.

WARNING

Do not allow any electrically conductive material to make contact with both the positive and negative terminals at the same time (i.e. a hand tool used when disconnecting and reconnecting battery cables). A short of this nature can cause severe burns and create dangerous sparks which could result in personal injury and/or property damage.

CAUTION

When disconnecting and reconnecting battery cables, the black cable must be connected to the negative terminal and the red cable must be connected to the positive terminal. Reversing these connections will immediately damage your system.

Never disconnect the battery when the engine is running. This can cause damage to the charging system. When replacing your battery, use the same brand and type as the factory installed battery. If this is not available, reference your engine Owner's Manual for recommended battery type and required performance specifications.

Inverter Batteries

Some models have inverter powered accessories such as the grill or air conditioning that utilize gel cell batteries. For care of these batteries please reference Chapter 8.

LED Lighting

LED (light emitting diode) fixtures do not have bulbs and are not serviceable. LEDs have extremely long life and should not need replacement during the life of the boat. In the event of damage or malfunction, the entire light assembly should be replaced. See your Grady-White dealer for replacement LEDs.

180, 192-236, 255-285, 306, 307 DC Accy Wiring Color Fuse/ Breaker

Accessory	Wire	Amperage	Location
Lights			
Aft Pole Light	14 ga Gry/Wht	10.0 w/ bow light	Accessory Panel
Bow Light	14 ga Gry	10.0	Accessory Panel
Cabin Lights	16 ga Blu/Grn	10.0	Fuse Block
Cockpit Lights	16 ga Blu/Yel	10.0	Accessory Panel
Console Lights (Interior)	16 ga Blu/Grn	5.0	Fuse Block
Helm Storage Light	16 ga Blu/Grn	5.0	Fuse Block
Livewell Light	16 ga Blu/Red	w/ Livewell Pump	Accessory Panel
Mast Light	14 ga Gry/Red	w/ Bow Light	Accessory Panel
Panel Lights	16 ga DkBlu	w/ Nav Lights	Accessory Panel
Spreader Lights (thru Touch Dome Lt)	14 ga DkBlu/Wht	10.0	Hardtop or T-top Fuse Block
Spreader Lights (thru Inst/Sw Panel)	14 ga DkBlu/Wht	5.0	Accessory Panel
Underwater Lights 255, 257 (Panel/ Light)	10 ga/16 ga Blu/Pnk	10.0	Accessory Panel
Underwater Lights 271, 275, 285 (Panel/Light)	10 ga/16 ga Blu/Pnk	15.0	Accessory Panel
Pumps			
Bilge Pump (Aft excluding 228):			
Rule 1500	16 ga Brn	8.0	Accessory Panel
Auto Float Switch (Aft)	16 ga Brn/Wht	7.5	Near Battery
		8.0	In Battery Select Box
Bilge Pump (Forward/228 Aft):			
Rule 1100	16 ga Brn/Blk	6.0	Accessory Panel
Auto Float Switch (Forward)	16 ga Brn/Red	5.0	Near Battery
		5.0	In Battery Select Box
Rule 1100 (Integrated Float) - 255, 257, 271, 275 &285	16 ga Brn/Blk & Brn/Red	5.0 / 6.0	Battery Select Box / Accessory Panel
Head - Head Pump (Marine Electric)	10 ga Red/Gry or Red	25.0	Fuse Block
Head - Control Panel, Holding Tank, & Macerator (Marine)	10 ga Org/Red	20.0	Fuse Block
In-line Macerator Pump	10 ga Org/Gry	20.0	Accessory Panel
Livewell Pump Sentry 1100 GPH	16 ga Org/Brn	6.0	Accessory Panel
Livewell Pump Sentry 800 GPH	16 ga Org/Brn	5.0	Accessory Panel
Livewell Pump Sentry 500 GPH	16 ga Org/Brn	2.0	Accessory Panel
Shower Sump Pump (Float Switch)	16 ga Brn/Org	2.5	Fuse Block
Raw Water Pump	12 ga Org/Brn	15.0	Accessory Panel

180, 192-236, 255-285, 306, 307 Accy Wiring Color Fuse/Breaker– *CONTINUED*

Accessory	Wire	Amperage	Location
Fresh Water Pump	12 ga Org/Blu	15.0	Accessory Panel
Power Assist Pump (ignition)	16 ga Violet	5.0	Yamaha ignition panel (in line)
Power Assist Pump (main)	8 ga Red	50.0	Battery Compartment
Anchor Windlass			
Anchor Windlass (232/235/236/255/257/271)	6 ga Red	35.0	At helm near switch
Anchor Windlass (275/285/306/307)	6 ga Red	50.0	**275/285:** At helm near switch **306:** In console rigging area **307:** In Battery Select Box
Positive to Switches (306 only)	14 ga Red	5.0	In-line @ Solenoid
Down (306 only)	14 ga Grn/Org	N/A	N/A
Up (306 only)	14 ga Blu/Org	N/A	N/A
Miscellaneous			
12V Accy Outlets	10 ga Red/Org	15.0	Fuse Block
12V USB Outlets	14 ga Red/Org	5.0	Fuse Block
Amp Power	10 ga Red	10.0	Fuse Block
Amp Remote	16 ga Wht/Vio	N/A	N/A
Accessory Negatives (Branch)	Blk [1]	N/A	N/A
Accessory Negatives (Mains)	4/6/10 ga Blk	N/A	N/A
Accessory Panel Power Lead	4/6/10 ga Red	40.0 / 50.0	Near Battery or in Battery Select Box
Bow Thruster Positive	4/0 Red	250.0	Battery Compartment
Constant 12V (Memory, High Bilge Alarm)	14 ga Red/Pnk	15.0	Near Battery or in Battery Select Box
High Bilge Alarm Sender Wires	"16 ga Red/Wht (Sender) 16 ga Brn/Pnk (Return)"	N/A	At panel and float switch
Electronics Box Ram (306)	16 ga Wht	5.0	Accessory Panel
Fuel Grounds	16 ga Grn	N/A	N/A
Fuel Tank Sender (Auxiliary)	16 ga Pnk/Wht	N/A	N/A
Fuel Tank Sender (Main)	16 ga Pnk	N/A	N/A
Hardtop or T-top Negative (Main)	10 ga Blk/Blu	N/A	Negative Buss
Hardtop or T-top Power Lead (Main)	10 ga Red/Blu	N/A	Fuse Block / Positive Block
Horn (180-216, 235-236, 255, 257, 275)	12 ga Org/Wht	5.0	Accessory Panel
Horn (228, 232, 271, 306)	12 ga Org/Wht	(All) 10 / 15 (306)	Accessory Panel
Horn (307)	10 ga Org/Wht	15.0	Accessory Panel
Hydraulic Trim Tabs	14 ga Org	20.0	Fuse Block
	22 ga Org	1.5	Yamaha Ignition Panel (in line)

180, 192-236, 255-285, 306, 307 Accy Wiring Color Fuse/Breaker– *CONTINUED*

Accessory	Wire	Amperage	Location
Isolator Lead	6/8 ga Red	100/50 [2]	Rigging Compartment
Power Seats (255, 275, 285, 307) Positive	12ga (Port) 16ga (Helm)-Wht/Org	20(Port)/10(Helm)	Fuse Block
Actuator Control Extend	14/16 ga Wht/Grn	N/A	N/A
Actuator Control Retract	14/16 ga Wht/Blk	N/A	N/A
Refrigerator	10 ga Org/Yel	15.0	Fuse Block
Stereo	16 ga Red	10.0	Fuse Block
Stereo Upgrade (306, 307)	4 ga Red	80.0	MRCB in Aft Rig Comp (307), Console (306)
SureShade Power	14 ga LtBlu/Red	15	CB on Inst/Sw panel
SureShade Control	16 ga LtBlu/Org	5.0	WP Fuse on Inst/Sw panel [3]
Close	16 ga LtBlu/Blk	N/A	N/A
Open	16 ga LtBlu/Wht	N/A	N/A
Windshield Wiper - Port	16 ga Org/Grn	Dual = 10.0	Accessory Panel
Windshield Wiper - Stbd	16 ga Org/Blk	Single = 5.0	Accessory Panel
Windshield Wiper - Park	16 ga Org	w/ motor	Accessory Panel

[1] Wire gauge is typically the same as the gauge of the power wire to the corresponding component, except as noted.
[2] Dependent on V6 or V8 pre-rig
[3] Newer Silent-Glide models (2018+) do not use 5A circuit

CHAPTER 7: WINTERIZATION AND STORAGE

General

Boats stored during the winter or for an extended period of time require some routine maintenance. The boat and its systems should be checked for maintenance and repairs prior to and during the storage process. Arrange repairs during the storage period to reduce downtime during your boating season.

Avoid costly damage and delay when launching your boat by having it stored and winterized properly. This information is presented as a general guide; the actual storage should be performed by a professional and qualified dealership. See page 71, in *Sportfish, Cruisers, Yachts Owner's Manual* for a checklist on winterizing and storage.

Boat Storage

Grady-White boats are equipped with stern eyes and a bow eye. These eyes are for anchoring and trailering purposes, and should be inspected regularly to insure structural integrity.

⚠ CAUTION

Boats should not be lifted for storage using the bow and stern eyes. Use slings or bunks for lifting.

Slings must be used for lifting your Grady-White to prevent damage to the boat. To avoid personal injury and property damage, it is advised to take extra precautions when lifting or moving the boat for storage.

While transporting a boat by a lift or fork lift, the structure should remain as close to ground level as possible. If slings are necessary for lifting or transporting, they should be in proper condition and tied together to prevent any movement (separating or slipping) which could cause damage to the boat. If fork lifts are used to move the boat, the forks should be padded, contoured to match the hull bottom, and in a secure location under the hull in alignment with the stringers. The forks should be long enough to prevent the boat from rocking forward and aft causing it to become unbalanced. Always verify the fork lift's capacity to ensure it is sufficient for the weight of the boat. Other conditions that should be considered before hauling, transporting, or storing your boat include overhead lines, ground conditions (frozen or soft), and storm conditions that may arise.

When storing your boat on the trailer, raise and block the trailer axle to prevent tire deterioration. This is an excellent time to lubricate and pack the wheel bearings per the manufacturer's instructions.

Make sure the keel, chines and transom are fully supported. Indoor storage is beneficial particularly if your climate produces freezing weather. The storage unit should not be airtight, but should be ventilated. Ventilation is extremely important both around and through the boat.

For outdoor storage, a canvas cover should be used to prevent "sweating". The cover should be fastened securely so that winds cannot remove it or cause it to chafe the boat. A poor covering job will eventually cost more than the price of a well-made cover.

⚠ CAUTION

Boats covered with plastic shrink wrap during storage must leave the fuel vent fitting outside of the enclosure to prevent the trapping of dangerous fumes.

Cleaning And Lubricating

Clean and wax your boat before storage. If you store your boat in the water, there may be a layer of growth on the bottom. As it dries, this debris will harden. Clean, scrub and scrape the bottom promptly when the boat is removed from the water. Remove all marine growth and other foreign matter from the hull. Clean the inside of hull openings, thru-hull fittings and scupper drains. Inspect the hull for damage. Avoid harsh cleaners, citrus solutions and bleaches; these could have harmful effects on your boat's gel-coat and metal components.

Check cleats and rails for corrosion and tightness. Clean stainless steel as directed under *"Hardware/Stainless Steel Rails" on page 6-6*. Use a quality metal preservative like T-9® on metal surfaces to prevent salt water damage. Check for loose silicone, hinges and unseated gaskets. Replace or tighten where necessary. Heavy seas pounding and twisting the hull can cause leaks in your windows, doors and hatches. Check hinges for corrosion. Lubricate hinges as necessary.

Draining And Water System

If the boat is stored out of water, remove the garboard drain plug to keep the bilge dry. Store your boat with the bow elevated for drainage.

Drain all water tanks, hoses, filters and pumps to prevent freeze damage. The freshwater system may be drained by running any faucet or shower until the tank is empty. When empty, turn the water pump off to prevent damage. Remove the filter on the freshwater pump inlet, remove any water and reinstall. Residual water will not damage the tank. If equipped with a water heater, the water heater must be drained individually after emptying the water tank. Drain the water heater by opening the drain faucet on the water heater. The water from the water heater will drain into the bilge. If desired, the freshwater system may have a non-toxic antifreeze for potable water systems added. To drain other systems, close seacocks and run the pumps until the lines are dry. Open the seacocks after lines are dry if the boat is stored out of the water. Draining will help prevent water stagnation in warmer climates.

Head System

Empty toilet and holding tank making sure all water is cleared. Reference Owner's Packet for manufacturer's information on winterization. Water should be removed from deck pump-out hoses. Drain portable heads. Remember to drain the upper and lower tanks. Water should be removed from deck pump-out lines.

Batteries

Fully charge the batteries before storing. A weak battery loses its charge more rapidly than a strong battery. Coat the battery terminals with grease or an anti-corrosion product.

Engines

See your engine Operator's Manual regarding the winterizing procedures. Follow instructions carefully, and your engine will withstand severe weather conditions. Change all filters. Check hoses and clamps. If you have developed any vibrations during the season, look for loose engine bolts, bent shafts or bent propellers.

Fuel System

The fuel systems should be winterized by following the fuel system maintenance and fuel tank compartment instructions in the maintenance and service section. Tanks should be kept filled when the boat is not in use to reduce the accumulation of moisture and condensation. Add stabilizer to fuel that won't be used in 60-90 days. Use fuel stabilizer specifically designed for alcohol blended fuel if using E10 gasoline.

Storage Checklist

In addition to winterization guidelines the following checklist can be used as a guide for storing your boat. Additional details should be added as needed for your personal application.

- Remove all loose items and personal effects.
- Remove any detachable and valuable equipment such as electronics. Store all electronics inside. Your compass should be covered for the winter. Ultraviolet rays from the sun will cloud the compass and make it difficult to read.
- Winterize all equipment as directed in the manufacturer's manuals.
- Store cushions indoors to prevent mildew.
- Clean the exterior and interior of the boat. Remove all grease, oil, salt spray, etc.
- Remove garbage. Clean storage areas, fish boxes, and livewells. Prop fishbox lids open.
- Lubricate hinges, valves, the backs of electrical panels, and other surfaces that will rust.
- Check underwater items. Hardware should be in good condition and tight.
- Inspect electrical systems and have any repairs performed.

Getting Boat Out After Storage

Before placing your boat in the water for the boating season, have the hull bottom sanded and reapply anti-fouling bottom paint if necessary. Leave as much equipment and personal effects as possible off the boat until after launch and final check.

Prior To Launching

Start your own personalized list of items to check and perform prior to placing your boat in the water. The following list will give you some ideas and suggestions:

- Check all gear and replace if necessary.
- Check thru-hull fittings for cleanliness, damage, and tightness.
- Check prop installation and tightness.
- Clean battery terminal posts with a wire brush or bronze wool. Apply a light coating of grease or anti-corrosion product to posts.
- Check all wire connections for contact corrosion and tightness.
- Check hull seacock ball valves for easy operation and for condition of hose.
- Check operation of bilge pumps in manual and automatic modes.
- Check shower sump pump (if installed).
- Check operation of all electrical circuits.
- Check the hoses on the freshwater system, and close all valves, fill freshwater system and check for leaks.
- Perform maintenance on engines according to the manufacturer's manuals prior to returning them to service.
- Check all engine and steering control cables and linkage for operation. Lubricate cables and linkage as necessary.
- Check safety equipment including flares, fire extinguisher and first aid kits. Replace items as necessary.

After Launching

- With the boat in the water, check all sources of possible leaks stem to stern.
- Thoroughly check the fuel system including hoses, fittings, connections, valves, and filters for leaks.
- Connect to shore power (if installed). Check all electrical equipment operation.
- Check operation of toilet (reference manufacturer's manual).
- Test run engines and generator (if installed) as directed in manufacturer's manual.

CHAPTER 8: GULFSTREAM 232

Specifications

Beam-amidship	9′ 3″ (2.8 m)
Bridge Clearance	6′ 5″ (1.9 m)
Bridge Clearance with Hardtop	8′ 8″ (2.6 m)
Centerline Length	23′ 5″ (7.1 m)
Freshwater Capacity	12 Gallons (37.9 L)
Fuel Capacity	141 Gallons (533.7 L)
Hull Draft	20″ (50 cm)
Engine Shaft Length	25″ (64 cm)
Engine Mounting Position	Mounting Hole: 2nd Hole from Top
Transom Width	8′ 10″ (2.7 m)
Dry Weight	Single – 4538 lb (2058.5 kg)
	Dual – 4605 lb (2088.8 kg)
Maximum Capacities	
Persons	10 (or 1650 lb) (748.4 kg)
Weight	3100 lb (406.1 kg)
Outboard Max HP	400 HP (298.3 kW)

Operation Of Standard Features

Helm Switch Panel

At the helm you will find an accessory switch panel. Above each switch on the panel is a dedicated circuit breaker to provide over-current protection for the given circuit. Not all boats are equipped with the same accessories. See *"180, 192-236, 255-285, 306, 307 DC Accy Wiring Color Fuse/Breaker" on page 6-11* for recommended breaker amperages. Consult your dealer for specific information or questions on the accessories included on your boat.

- **Aft and Forward Bilge**
  These two-way switches serve as manual switches for each bilge pump in the event of failure of their automatic float switch. These switches operate independently of each other.
- **Cockpit Light**
  The cockpit lights (blue) provide illumination in the cockpit.
- **Freshwater**
  This switch activates the pressurized freshwater system.

- **Horn**
  This switch activates a horn which meets USCG requirements for sounding devices.
- **Livewell**
  This switch activates the livewell pump and light.
- **Navigation/Anchor Lights**
  This three-position switch (NAV-OFF-ANC) changes the lighting configurations to running or anchor lights.
- **Raw Water**
  This switch activates the raw water washdown system.
- **Wiper**
  This switch powers the windshield wipers and optional windshield washer.
- **Accessory**
  Switches and breakers labeled "ACC" are blank. They may be used for non-factory installed accessories. Switch labels are available from your dealer for non-factory installed options.

Other Switches

- **Trim/Tilt**
  The trim/tilt switch is located on the throttle control. Trim changes the angle of thrust of the engine (reference *"Trim" on page 4-1*). Tilt raises the drive unit for trailering.
- **Trim Tab**
  These switches control the hydraulic trim tabs used for adjusting the attitude of the boat. See *"Trim Tabs" on page 8-9* for more details.

NOTICE
Use anti-corrosion spray on the back of panels and on exposed wires to prevent corrosion that could lead to an electrical system failure.

Auxiliary Fuse Block

The auxiliary fuse block located under the dash provides a source of power for electronics and other accessories. Your model utilizes the automotive type fuse.

Accessory Outlet - 12 Volt

A 12-volt outlet is installed in both the port and starboard deckwing inserts at the helm. These outlets provide easily accessible power supplies for accessories such as cell phones and spotlights.

NOTICE
These outlets cannot be used with a cigarette lighter.

Battery Select Switch

Boats equipped with two batteries have a battery select switch to indicate which battery will be used. The switch is labeled “1”, “2”, “1+2” and “off”. In normal use alternate between the battery “1” and battery “2” positions. The battery that is selected will provide power to the engine and accessories. In an emergency situation when neither battery will start the engine, the select switch allows you to combine the power of both batteries by selecting “1+2”. However, once the engine is started, you should return the switch to the “1” or “2” position.

On twin engine boats with two select switches, a switch should be connected to each engine. Either battery may start either engine. In normal use, select position “1” on one switch and position “2” on the other so both batteries will be charged simultaneously. The DC accessories on the boat will always be controlled by the starboard switch.

⚠ CAUTION

Never turn the battery select switch to the "off" position with the engine running as this could damage the charging system.

Bilge Pump/Float Switch

Your boat is equipped with automatic float switches adjacent to the bilge pumps. A float switch will enable the bilge pump to come on automatically if a significant amount of water accumulates in the bilge. These switches are wired directly to the batteries. They function independently of the battery select switch(es), and can activate the bilge pump with the battery select switch(es) in the "off" position. Batteries should be inspected frequently to ensure proper operation. The bilge pumps are also equipped with switches at the helm. When the switch is in the "on" position, the pump will run continuously. When a switch is in the "off" position, the pump is off unless activated by the float switch.

⚠ CAUTION

To prevent damage to the bilge pump, do not run it dry for a prolonged period of time.

Bilge Pump Location

The 232 has two bilge pumps. The aft bilge pump is located in the aft rigging compartment, just forward of the transom. It can be accessed by opening the rigging door behind the folding aft seat. The forward bilge pump is located in the cabin under the access plate in the floor

Carbon Monoxide Detector

The carbon monoxide detector in the cabin serves as a warning system for exposure to poisonous carbon monoxide fumes. Carbon monoxide is a colorless odorless gas produced in the exhaust of combustion engines. It can accumulate in amounts that may be hazardous or fatal. This accumulation may occur very quickly from engine exhaust entering the boat due to wind currents, low pressure areas in the cabin, or other means of air movement. The source of CO may be your boat or another boat adjacent to it, so exercise caution when in the proximity of other vessels with propulsion engines or generators in operation. For proper operation and maintenance, refer to the literature provided by the manufacturer in your Owner's Packet.

⚠ WARNING

End-of-Life (EOL)
The carbon monoxide detector is powered by a dedicated, sealed lithium ion battery, and is not user serviceable. The permanent battery is made to last the life of the unit, approximately 7 years. When the unit reaches EOL status it will no longer flash any indicator lights and there will be an audible beep once every 60 seconds, indicating the entire carbon monoxide detector should be replaced.

Cockpit Shower

To operate the cockpit shower, the freshwater switch located on the helm switch panel must be in the "on" position. Open the cover and pull the shower wand from the recessed deck fitting. Depress the button on the back of the wand to spray water. To reinstall the shower wand, gently feed the hose down through the deck and replace the cover on the fitting.

Compass

The compass is located at the helm station in direct view of the operator when navigating the boat. Follow the instructions in the compass manual included in the "Owners Packet" to make compensation adjustments.

Engine Flushing System

The onboard engine flushing system is used to clean the cooling water passages of your engines using a garden hose and tap water. To operate this system, do the following steps:

1. Screw the garden hose adapter included in your owner's manual packet onto a garden hose that is connected to an external freshwater supply.
   Note: The freshwater system on your boat is not a suitable water supply for the engine flushing system; it will not supply enough water or pressure to properly flush the engines.
2. Next, locate the engine flush panel aft in the cockpit and connect the garden hose to one of the fittings on the panel. Each fitting is labeled with the corresponding engine.
3. With the engines off, turn on the water supply and let the water flush the passages.

Repeat this process until all engines have been flushed. Follow the engine manufacturer's recommendations for duration and frequency of flushing. The water supply does not need to be turned off before disconnecting the garden hose from a fitting. When flushing the engines when your boat is in water, tilt the engines up to achieve better results.

Freshwater System

The 232 is equipped with a pressurized freshwater system. The freshwater pump is activated by the freshwater switch on the helm switch panel and supplies water from the 12 gallon (45.4 L) water tank to the freshwater components on board. The freshwater pump can be accessed through the lower door in the aft cabin wall. The water tank is located beneath the lid in the forward liner.

⚠ CAUTION

The freshwater system is not a potable water source. Do not use the water from the freshwater outlets on your boat for drinking purposes. The quality of the water is dependent upon the cleanliness of the water tank and other components of the freshwater system. The label pictured below can be found at all freshwater and raw water outlets on your boat. Contact your dealer for replacement labels.

Hardtop

Do not use the hardtop for storing heavy or large items such as a raft. The frame for the top is designed for continual use with antennas, radar, and outriggers. The additional weight caused by larger items such as a raft may cause damage to the frame structure.,

Head

Marine Head (With Hand Pump) Operation

1. Open the head inlet seacock (handle in the vertical position). This seacock can be accessed through the lower door in the aft cabin wall.
2. Position the wet/dry bowl selector in the wet bowl setting. Fill the toilet with water by pumping the handle several times.
3. **Flush** the toilet by pumping the handle several more times in the wet bowl position. The contents of the bowl are discharged into the holding tank.
4. Move the bowl selector to the dry bowl position and pump the handle until almost all of the water is removed. Leave the toilet in the dry bowl position when not in use.
5. Close the head inlet seacock (handle in the horizontal position).

Electric Marine Head Operation

1. Open the head inlet seacock (handle in the vertical position). This seacock can be accessed through the lower door in the aft cabin wall.
2. Fill the toilet with water by turning the flush control knob clockwise on the pump beside the bowl.
3. Flush the toilet by turning the flush control knob clockwise again.
4. Turn the flush control knob counterclockwise to remove most of the water from the bowl. The contents of the bowl are discharged into the holding tank.
5. Close the head inlet seacock (handle in the horizontal position).

Emptying Marine Head Holding Tank

Using Deck Pump-out Fitting

1. Remove the cap from the deck pump-out fitting located in the port walkaround.
2. Connect a vacuum hose from a pump-out station to the deck fitting and run until the tank is empty.
3. Replace the cap on the deck pump-out fitting.

Using Discharge Seacock

1. Open the head discharge seacock (handle in the vertical position). This seacock can be accessed through the lower door in the aft cabin wall.
2. Press the level/sleep button on the tank level monitor.
3. Press and hold the empty button for 3 seconds to activate the pump. The pump will run until the tank is empty.
4. Close the head discharge seacock (handle in the horizontal position).

NOTICE
Overboard discharge seacock must be secured in the "closed" position in accordance with the laws in your boating area.

High Bilge Water Alarm

Your boat is equipped with a high bilge water alarm. Although some residual accumulation of water in the bilge is normal, this alarm will alert you if water reaches a high level that could impair operation of the boat or be damaging to equipment. The alarm is activated by a float switch that can be accessed through the lower door in the aft cabin wall. This float switch is separate from the bilge pump system and only activates the high bilge water alarm. The alarm panel (pictured below) provides both audible and visual alert signals. This panel is located inside the cabin on the aft bulkhead. When activated, the red light on the switch will be on and a high pitched tone similar to

that of an in home smoke detector will sound. This is the recommended position to leave this switch. With the audible alarm off, the red light will be the only indication of a high water situation. Should the high bilge water alarm activate, immediately investigate to determine the source of water entry. Also, confirm your bilge pumps are working properly. If the situation cannot be quickly resolved, contact your dealer and remove the boat from the water.

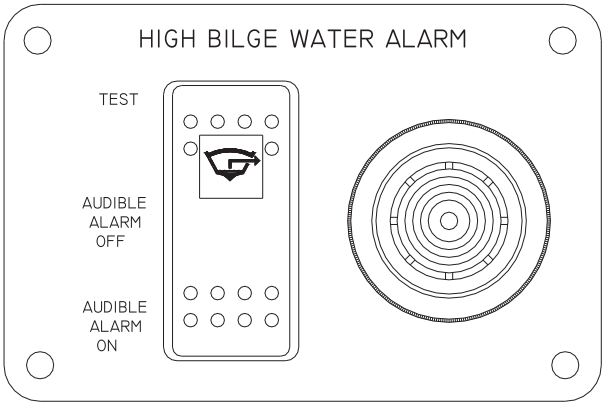

Livewell - Raw Water

To operate the livewell, open the seacock located on the port side of the aft bilge using the remote seacock arm labeled livewell. The livewell pump is screwed directly into this seacock. The livewell switch at the helm should be in the on position. Place the livewell standpipe in the drain located at the bottom of the livewell. Screw it down until the black flange makes contact with the flange on the drain fitting. Water will enter through a plenum along the side of the livewell and be distributed through a series of holes arranged vertically along the plenum. The water will rise to a depth even with the strainer on the standpipe and drain overboard. To evacuate debris and bait waste from the bottom of the livewell while it is in operation, unscrew the standpipe approximately three turns to expose two ⅜″ holes located in the threads of the standpipe base. These holes will allow a small amount of water to escape and remove any waste that has settled in the bottom of the livewell.

NOTICE
If the livewell seacock is left open and the pump is not on, the boats forward motion through the water will gradually fill the box. To prevent this inadvertent filling, close the seacock when the livewell is not in use.
Under certain conditions, placing the outboard engine(s) in reverse will ventilate the water under the boat and create an air lock in the livewell pump. To prevent this situation from occurring, it is recommended the livewell be turned off prior to any high RPM or continuous reverse operation. If the livewell pump becomes air-locked, correct this situation by turning the pump off for 20 seconds.

Main Circuit Breaker

There is a 50A circuit breaker located in the panel beneath the battery select switches. This is the main breaker protecting the wiring supplying power to the helm switch panel. This breaker may be manually tripped by moving the arm to the "off" position. If this breaker is tripped, moving the arm back to the "on" position will reset it.

Seacocks

Ball valve seacocks are installed on the thru hulls for the livewell, washdown, and some head features. It is necessary for the seacocks to be in the "open" position for operation. The "open" position is identified by the orientation of the handle. If the handle is in line or parallel to the body of the valve, the seacock is in the "open" position. If the handle is perpendicular to the body of the valve, the seacock is in the "closed" position. For seacocks with remote arms installed, the "open" position can be obtained by pulling up on the remote arm attached to the seacock handles. Pushing down on the remote arm closes the seacock.

⚠ CAUTION

All seacocks should be in the "closed" position if not in use or if the boat is unattended to prevent the taking on of water if a plumbing component fails.

Stereo

The stereo is equipped with Apple AirPlay® and built-in Wi-Fi and Bluetooth®. The stereo is capable of doing over-the-air software updates, on a touchscreen display. The stereo also includes advanced SiriusXM-ready features. It is located inside the cabin with two speakers in the cabin, two at the helm, and two in the cockpit. There is an amplifier located below the shifter that operates the cockpit speakers. The stereo can be remotely operated with the touch pad at the helm station. An auxiliary audio input panel is also part of the stereo system. Refer to the stereo's owner's manual in your Owner's Packet for operating instructions.

Trim Tabs

Trim tabs are electrically and hydraulically operated. The trim tab system includes a hydraulic pump, a switch with an integrated indicator, and an auto-retract feature. The switch controls the pump which lowers and raises the trim tabs. The indicator keeps you constantly aware of the trim tab's position. The auto-retract feature automatically raises the tabs every time the ignition switch is turned off.

Trim tabs are used to regulate the attitude of the boat while moving. They are operated by a two-rocker switch panel and will aid in trimming the boat fore and aft for a smoother ride. Trim tabs can improve the ride of your boat by adjusting where the water is hitting the keel line. In a slight chop, the waves may be hitting the keel of your boat around the helm area causing an uncomfortable ride. By adjusting the trim tabs and lowering the bow, the waves will hit the keel at a more forward

point and soften the ride. Experimenting with trim tabs in various sea conditions will help you determine the best positions for your boat under different load conditions. Trim tabs are used to regulate the attitude of the boat while moving. They are operated by a two-rocker switch panel and will aid in trimming the boat fore and aft for a smoother ride. Trim tabs can improve the ride of your boat by adjusting where the water is hitting the keel line. In a slight chop, the waves may be hitting the keel of your boat around the helm area causing an uncomfortable ride. By adjusting the trim tabs and lowering the bow, the waves will hit the keel at a more forward point and soften the ride. Experimenting with trim tabs in various sea conditions will help you determine the best positions for your boat under different load conditions.

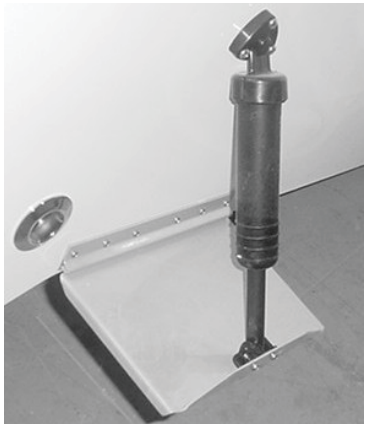

Trim tabs are also useful in correcting a port or starboard running list. If the boat is listing to the port side, press the starboard trim tab switch toward “bow down”. Press the port trim tab switch toward “bow down” to correct a starboard list. This will tend to lower the bow by pulling the higher side to a level position. If your bow is already in a low position and your tabs are down, you may correct a listing condition by pressing the trim tab switch toward “bow up”. This will cause the low side to rise and level the boat. The running angle will also gradually improve. Trim tabs in the extreme “bow up” positions will have no effect on the boat’s ride. Trim tabs in the extreme “bow down” position will cause the boat to come on plane with minimum bow rise. Unless you are operating at low speeds or with considerable cockpit weight you will likely want to raise the tabs slightly when underway to avoid “plowing” water. With the tabs in the “bow down” position, you will be able to maintain a plane at the least possible RPMs.

Trim Tab Pump Location

The trim tab pump is located on the starboard side of the aft rigging compartment. The hydraulic fluid level should be checked on a seasonal basis.

Washdown - Raw Water

To operate the raw water washdown, open the seacock located on starboard side of the aft bilge using the remote seacock arm labeled washdown. Depress the raw water switch on the helm switch panel. This system will now be pressurized at the washdown faucet outlet. This faucet may be used alone or with a hose. A hose with a spray nozzle attached may be used intermittently without turning the switch off in the same fashion as a home yard hose with a nozzle. The raw water pump has an internal pressurization switch that will maintain water pressure as needed until the switch is turned off at the switch panel. The pump is mounted to the transom in the aft starboard rigging area.

Operation Of Optional Features

Battery Charger

This battery charger is located in the aft rigging compartment near the batteries. The shore power must be connected for the battery charger to work. To activate, turn the breaker switch located under the aft starboard gunwale to the "on" position. The battery charger has a built-in isolator that senses the charging needs of all the batteries and distributes charge accordingly. At the point that all batteries are nearly fully restored, the battery charger will automatically reduce the current being sent to the batteries to a maintenance level. See the charger Operation Manual in your Owner's Packet for further information.

Outriggers

Outriggers allow you to spread the lines trolled from your boat and decrease the chance of entanglement.

- **Advantages**
  - Advantages of outriggers include: offering bait throughout a larger area behind the boat, placing bait out of the wake zone, automatic drop back following strikes (which allows for fish to completely accept bait), and a reduction in unnecessary twisting action characteristic of artificial bait.
- **Instructions**
  - Guidelines for proper installation and use are provided in your Owner's Packet.
- **Care And Maintenance**
  - Outriggers should be washed with freshwater, a mild soap and a soft cloth. The outrigger poles should be sprayed down with freshwater. Never use acidic or abrasive cleaners on outriggers.
  - A periodic waxing of your outriggers is suggested if your boat is frequently exposed to salt water. The wax will provide a protective coating and seal the pores of the metal. A non-abrasive high quality marine or automotive wax is recommended. Before storage, clean and wax the outriggers.
  - During assembly, grease all threads, bolts, and tubes where one section is inserted into another. Once a year disassemble and regrease all applicable surfaces.

Power Assist Hydraulic Steering

The engine ignition switches must be on for this system to function. The power assist hydraulic pump is activated simply by turning the steering wheel. The hydraulic pump senses the motion of the hydraulic fluid from the helm and pumps fluid in the cylinders at the engine accordingly. The power assist pump is located in the aft rigging compartment under the rigging lid in the cockpit floor. Over-current protection is provided by a 50A fuse located on the positive terminal of battery bank #2. This system is compatible with multiple steering stations and the use of an autopilot. Refer to the power assist owner's manual in your Owner's Packet for more information.

Shore Power

The shore power feature provides AC current to the battery charger located in the aft rigging compartment. This is a dedicated system, supplying power only to the battery charger. It does not supply current to any other panels or devices on your boat. The shore power is used by connecting the heavy duty cable supplied with the boat to an appropriate external power source. This cable provides power to the boat's shore power inlet that is wired to the breaker under the aft starboard gunwale.

Connecting The Shore Power

1. Verify that the external power source is a 3 wire grounded system with amperage and voltage ratings compatible with the boat's AC system ratings.
2. Be sure there is sufficient cable length to allow for normal movement between the boat and the dock.
3. Turn the circuit breaker under the starboard gunwale off. Turn the circuit breaker at the dock outlet off.
4. Connect the shore power cable at the boat inlet first.
5. Connect the shore power cable at the dock outlet and turn the dock outlet circuit breaker on.
6. Turn the circuit breaker under the starboard gunwale on. Note: Test circuit breaker monthly by pressing the test button and then resetting.

⚠ CAUTION

The retaining ring on the shore power cable plug should be screwed on the threaded portion of the boat inlet to prevent the cable from working loose or becoming detached when in use. If your shore power cable is missing this ring, or showing signs of wear or burn marks around the terminals where it plugs into the inlet, it should be replaced immediately. A loose fitting plug will create electrical resistance that can lead to a fire hazard.

Disconnecting The Shore Power

1. Switch the circuit breaker under the starboard gunwale off.
2. Switch the circuit breaker at the dock outlet off.

3. Disconnect the shore power cable at the dock outlet first.
4. Disconnect the shore power cable at the boat inlet.

NOTICE
Keep inlet cover closed tightly when not in use.

Windshield Washer Solenoid

The wiper switch located on the helm switch panel controls your windshield washer. Water may be sprayed on the windshield by pressing down on the wiper switch with the freshwater system pressurized. To pressurize, place the freshwater switch on the helm switch panel in the “on” position. The starboard wiper will operate and the washer will spray until the wiper switch is turned off.

Safety Labels and Location

The safety labels shown below for this model should be inspected regularly. To ensure safety in normal operation, replace any labels on your boat that become damaged, missing or weathered such that they are no longer legible. Replacement labels may be obtained from any Grady-White dealer or by contacting the Grady-White customer service department at 252-752-2111 or custserv@gradywhite.com.

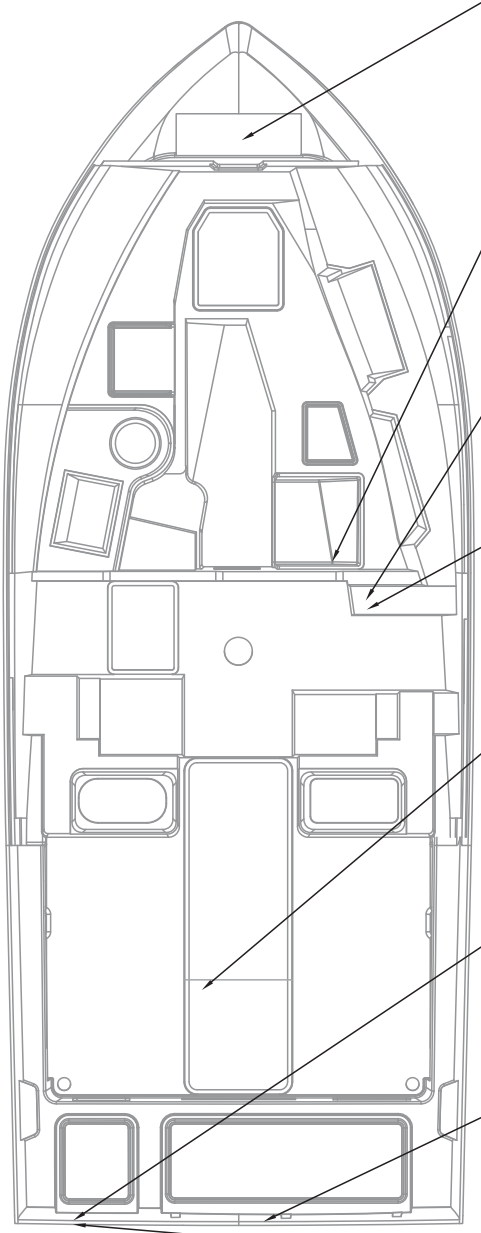

⚠ CAUTION

TO AVOID PERSONAL INJURY, KEEP HANDS FREE OF WINDLASS AND ROPE WHEN OPERATING

CAUTION

THIS MARINE HEAD SYSTEM WILL FLUSH, MACERATE, AND DISCHARGE WASTE AND MARINE/RV TOILET TISSUE ONLY. ANY OTHER MATERIALS CAN RESULT IN DAMAGE OR SYSTEM MALFUNCTION.

⚠ WARNING

Carbon monoxide (CO) can cause brain damage or death

Engine and generator exhaust contains odorless and colorless carbin monoxide gas.

Signs of carbon monoxide poisoning Include nausea, headache, dizziness, or drowsiness, and lack of consciousness.

Get fresh air if anyone shows signs of carbon monoxide poisoning.

See Owner's Manual for information regarding carbon monoxide poisoning.

NW-204-08

⚠ WARNING

ROTATING PROPELLER MAY CAUSE SERIOUS INJURY OR DEATH. SHUT OFF ENGINE WHEN NEAR PERSONS IN THE WATER.

NMMA NW207-13

⚠ CAUTION

ACCESS HATCH AND MOUNTING SCREWS MUST BE SEALED AFTER RIGGING TO INSURE WATERTIGHT INTEGRITY. INSPECT FREQUENTLY AND RE-SEAL WITH SILICONE SEALANT IF REQUIRED.

⚠ DANGER

Carbon monoxide (CO) can cause brain damage or death

Engine and generator exhaust contains odorless and colorless carbin monoxide gas.

Carbon monoxide will be around the back of the boat when engines or generators are running.

Move to fresh air, if you feel nausea, headache, dizziness, or drowsiness.

NW-206-08

⚠ WARNING

AVOID SERIOUS INJURY OR DEATH FROM FIRE OR EXPLOSION RESULTING FROM LEAKING FUEL. INSPECT SYSTEM FOR LEAKS AT LEAST ONCE A YEAR

⚠ WARNING

ROTATING PROPELLER MAY CAUSE SERIOUS INJURY OR DEATH. DO NOT APPROACH OR USE LADDER WHEN ENGINE IS RUNNING.

CHAPTER 9: LIMITED WARRANTY

Registration Of Purchase

The "Federal Boat Safety Act of 1971" requires all boat manufacturers to maintain a record of all first retail purchasers and their current addresses for the purpose of notification in case of defective parts or equipment or in case of non-compliance with standards or regulations set forth by this act. Under the act, failure to complete and return your factory warranty information for our records will waive your right to notification of defect and/or repair at manufacturer's expense. To ensure that this information is received, your Grady-White dealer is responsible for registering your boat at the time of delivery.

Five Year Hull Transferable Warranty

Grady-White warrants to the original retail purchaser of each new Grady-White boat that, under normal use, any structural hull defects covered by the warranty and reported within five (5) years from the date of delivery to the original retail purchaser will be repaired free of charge at Grady-White's sole discretion at either an authorized Grady-White dealer location or other Grady-White approved location as elected by Grady-White. A structural hull defect is defined as a substantial defect in the boat's hull which causes the boat to be unsafe or unfit for use under normal operating conditions. Expenses for hauling out and transportation to and from the point of repair will be the responsibility of the owner. The owner will also be responsible to remove and reinstall, at their own expense, all outboard engines, (if directly related to damage in question), as well as any and all personal effects and electronics equipment. All repairs are subject to prior written authorization by Grady-White Boats, Incorporated.

The Five Year Structural Hull Warranty is transferable to the second and subsequent owners for the remainder of the five (5) years from the date of delivery to the original purchaser. There is no fee involved in the transfer of warranty to the new owner. The Grady-White Boats Used Boat Registration Form must be completed online at the time of sale. This form can be found on the Grady-White website at the following web address: https://www.gradywhite.com/the-grady-experience/owners/used-boat-registration/. Upon receipt of this form, Grady-White will update its records to reflect the new ownership and warranty coverage will be provided for the remainder of the five (5) years.

One Year Material And Workmanship Warranty

Grady-White further warrants to the original retail purchaser of each Grady-White boat that under normal use, defects in workmanship and material covered by the warranty and reported within one (1) year from the date of delivery to the original retail purchaser will be repaired or replaced free of charge at an authorized Grady-White dealer. Expenses for hauling out and transportation to and from the point of repair will be the responsibility of the owner with all repairs subject to prior written authorization.

Grady-White Boats, Inc. reserves the right to improve its product through changes in design or material without obligation to incorporate such changes on boats built prior to the implementation of respected change(s).

Exclusions:

This warranty specifically does not include the following:

- Damage caused by abuse, negligence, vandalism, lack of maintenance, improper storage, or accident.
- Any statements, representations, or warranties given by dealer or other third persons other than those provided within this warranty.
- Any unit which is part of a rental fleet, used for racing, or commercial purposes.
- Any unit which has been salvaged or declared a total loss.
- The following consequential damages: a) loss of time; b) inconvenience; c) towing charges; d) expenses for travel, lodging, telephone, and gasoline; e) loss or damage to personal property or loss of revenue; f) loss of use of the boat; g) storage fees for the boat.
- Equipment or accessories which are not installed by Grady-White or which carry their own individual warranties, including, but not limited to engines, propellers, controls, steering, electronics and any other part expressly warranted by the manufacturer thereof.
- Damage or deterioration of cosmetic surface finishes including gel coat cracking, crazing, blistering, discoloration, chalking or fading, chrome, plated or painted metal, aluminum and stainless steel finishes, plastics or acrylic materials, windshields, glass breakage, all vinyl upholstery and canvas, instruments and gauges, and leakage around windshields, windows, hatches, and other apertures.
- Failure of the owner to use, maintain, or store the boat as specified in the Grady-White Owner's Packet; and any other failure to provide reasonable care and maintenance. Normal wear and tear maintenance items are excluded from warranty coverage including but not limited to filters, batteries, and bungees (refer to owner's manual for additional maintenance items).
- Any Grady-White boat which has been altered or modified from Grady-White factory specifications, including penetration of the hull by anyone other than Grady-White or a Grady-White authorized dealer following Grady-White factory specified procedures.
- Any failure or defect resulting from a previous repair not authorized by Grady-White.
- Any boat which has been overpowered according to the maximum Grady-White recommended engine horsepower specifications on either the capacity plate affixed to the boat or stated in the owner's manual.

Warranty Claim Procedures

Upon the discovery of a defect, the owner is to promptly contact the Grady-White dealer from whom the original retail purchaser purchased the boat who will affect the corrective action under this warranty upon prior written authorization from Grady-White Boats, Incorporated.

THESE WARRANTIES ARE EXPRESSLY MADE IN LIEU OF ALL OTHER WARRANTIES. DURATION OF ANY IMPLIED WARRANTY OF MERCHANTABILITY OR FITNESS FOR A PARTICULAR PURPOSE OR OTHERWISE SHALL BE LIMITED TO AND COINCIDENT WITH THE DURATION OF THESE EXPRESSED WARRANTIES.